OPERATOR'S MANUAL

AERATOR MODELS:

CA-18
Compact Aerator

TA-17D, TA-25D
Split Drive Aerators

TA-19D, TA-26D
Turf Aerators

48-RT, 60-RT, 72-RT
Tow Aerators

CLASSEN®

1028 Street Road • P.O. Box 38
Southampton, PA 18966 U.S.A.

TABLE OF CONTENTS

INTRODUCTION 1
- Thank You 1
- Read This Manual 1
- Warranty 1
- Measurements 1
- Serial Numbers 1
- Ordering Parts 1
- Directions 1

OWNERS RECORD 1

PRE-DELIVERY CHECK LIST 1

DELIVERY CHECK LIST 1

SAFETY PRECAUTIONS 2
- Training 2
- Preparation Safety 2
- Engine Safety 2
- Operational Safety 2

OPERATION 3
- Preparation 3
- Starting Engine 3
- Transporting Aerator 3
- To Operate Aerator 3

GENERAL MAINTENANCE 4
- Aerator Maintenance 4
- Engine Maintenance 5

AERATOR STORAGE 5
- Storing Aerator 5
- Operation After Extended Storage 5

SAFETY DECALS 5

CA-18 COMPACT AERATOR 6
- Parts Main Frame 6
- Parts Power Train and Tine Rotor Assembly 7
- Parts Handle and Control 8

TA-17D SPLIT-DRIVE AERATOR 9
- Parts Main Frame 9
- Parts Power Train Assembly 10
- Parts Handle and Control Assembly 11

TA-25D SPLIT-DRIVE AERATOR 12
- Parts Main Frame 12
- Parts Power Train Assembly 13
- Parts Handle and Control Assembly 14

TA-19D TURF AERATOR 15
- Left Side View 15
- Right Side View 16
- Engine Pulley Components 17
- Water Drum Components 17
- Drive Components 18

TA-26D TURF AERATOR 19
- Left Side View 19
- Right Side View 20
- Engine Pulley Components 21
- Water Drum Components 21
- Drive Components 22

48-RT TOW AERATOR 23
- Parts Main Frame 23

60-RT TOW AERATOR 24
- Parts Main Frame 24

72-RT TOW AERATOR 25
- Parts Main Frame 25

TWO YEAR LIMITED WARRANTY 26

INTRODUCTION

THANK YOU

Thank you for purchasing a CLASSEN Aerator

READ THIS MANUAL

Read this manual carefully in its entirety. It contains safety, operating, maintenance, and adjustment instructions for your Aerator. By following the operating and maintenance instructions you will prolong the life of your equipment and maintain its maximum efficiency. Failure to do so could result in personal injury or equipment damage.

This manual should be considered a permanent part of your Aerator and should remain with it if you sell it.

WARRANTY

Refer to last page.

MEASUREMENTS

U.S. Units of measure are used in this manual.

SERIAL NUMBERS

Write frame and engine serial numbers, plus model numbers in “Owner's Record” section below. You may need these numbers when you order parts. The serial number stick plate is located on the right rear of the Aerator frame.

ORDERING PARTS

When ordering parts, always give the serial number and model of your Aerator as well as the quantity, part number and description of the part needed.

DIRECTIONS

“Right Hand” and “Left Hand” sides of the Aerator are determined by facing the "back" of the Aerator as you would operate the machine.

OWNER’S RECORD

DATE PURCHASED _____

AERATOR MODEL NUMBER_____

AERATOR SERIAL NUMBER_____

ENGINE MODEL NUMBER _____

ENGINE SERIAL NUMBER_____

PRE-DELIVERY CHECK LIST

Check the following before you deliver the Aerator to the customer.

1. Guards and shields fastened in place.
2. Decals fastened and legible.
3. Weight bar installed.
4. Gas lever on engine turned on.
5. All lubrication points greased.
6. 6:1 gearbox oil level.
7. Engine oil level.
8. Air cleaner.
9. Touch up scratches.
10. Chain(s) tight.
11. Lowering handle working properly.
12. Control handle(s) working to tighten V-belt(s).
13. Add fuel, start engine, test run.

DATE SET UP _____/_____/_____

DELIVERY CHECK LIST

Review the operators manual with the customer.

1. Classen Mfg., Inc. warranty.
2. Safe operation and service.
3. How to use controls.
4. Operating the machine correctly.
5. Transporting the Aerator.
6. Correct fuel and lubricants.
7. Daily and periodic inspections.
8. Changing oil after break-in period.
9. Servicing the Aerator regularly and correctly.
10. Classen Mfg., Inc. parts and service.
11. Give the customer the operators manual and encourage customer to read it.

DATE DELIVERED _____/_____/_____

SIGNATURE _____

SAFETY PRECAUTIONS

TRAINING

1. Regard the unit as a piece of power equipment and teach this regard to all who operate this unit.
2. Read the instructions carefully. Be familiar with the controls and the proper use of the equipment.
3. Never allow children, teenagers or people unfamiliar with these instructions to use this piece of equipment.
4. Avoid operating unit while people, especially children or pets, are nearby. Keep in mind that the operator or user is responsible for accidents or hazards occurring to other people or their property.
5. Be sure you know how to stop the Aerator at a moments notice.

PREPARATION SAFETY

1. The use of personal protective equipment, such as (but not limited to) protection for the eyes, ears, feet and head is recommended.
2. While operating, always wear substantial foot wear and long trousers. Do not operate the equipment when barefoot or wearing open sandals.
3. Area should be free of all obstacles and debris.

ENGINE SAFETY

1. Handle gasoline with care; it is highly flammable.
2. Use an approved gasoline container.
3. Always add fuel before starting the engine.
4. Fill the fuel tank outdoors.
5. If fuel is spilled, do not attempt to start the engine. Move away from the area of the spill and avoid creating any source of ignition until fuel vapors have dissipated.

⚠ WARNING ⚠

DO NOT FILL TANK COMPLETELY FULL.

DO NOT SMOKE WHILE YOU FILL FUEL TANK.

DO NOT REMOVE GAS CAP IF ENGINE IS RUNNING.

DO NOT OPERATE ENGINE IN A CONFINED SPACE WHERE DANGEROUS CARBON MONOXIDE FUMES CAN COLLECT.

OPERATIONAL SAFETY

1. Carefully read and follow all caution decals. (See Pg. 5.)
2. Operate only in daylight or good artificial light.
3. Do not operate machine unless all guards, shields and covers are in place and in proper working condition.
4. It is essential all operator safety mechanisms be connected and in operating condition prior to use.
5. Do not change the engine governor settings or over-speed the engine. Operating an engine at excessive speed may increase the hazard of personal injury.
6. Disengage the drive control(s) and tine lowering handle before starting. (See Pg. 3, Fig 1.)
7. Start the engine carefully with feet well away from the tines.
8. Do not put hands, feet or clothing near rotating parts while the unit is being operated.
9. Travel up and down slopes at a 45 degree angle rather than across, to prevent unit from tipping over.
10. Exercise extreme caution when changing direction on slopes. Do not get too close to sharp drop-offs or operate unit on excessively steep slopes. **DO NOT** release control handle(s) on a slope, this will cause free wheeling, allowing unit to roll back down the slope. Make sure to leave yourself room to correct the problem if one arises.
11. Use caution when pulling the unit towards you.
12. Always stop the tines if unit has to be tilted for transportation or when crossing surfaces (i.e. sidewalks, driveways, stepping stones, etc.).
13. Never pick up or carry an Aerator while the engine is running.
14. Stop the engine and disconnect the spark plug wire: a) before checking, cleaning or working on unit, and b) after striking a foreign object (inspect the unit for damage and make repairs before restarting and operating).
15. Stop the engine: a) whenever you leave the unit, b) before refueling, and c) before clearing blockages.
16. Reduce the throttle setting during engine run-out and, if the engine is provided with shut-off valve, turn the fuel off at the conclusion of operating.

OPERATION

PREPARATION

1. Carefully read this manual and operate Aerator correctly.
2. Always check machine on level ground.
3. Visually check all moving parts and all fasteners, if loose or broken, tighten or replace. Check for broken or bent tines, replace if necessary.
4. Lubricate all fittings after every four hours of using machine, using a pressurized gun with standard lithium base lubricant (see "General Maintenance" section). Wipe off fittings before and after lubricating.
5. Check engine crankcase and gear reduction case oil levels with engine resting in a level position. Add oil if necessary. (Refer to engine manufacturer's owners manual for the correct type and amount of oil.)
6. Fill the fuel tank according to engine manufacturer specifications.
7. For best performance and maximum tine penetration, thoroughly water lawn the day before aeration.
8. Police lawn area for obstacles and debris (i.e. sprinklers, hoses, toys, etc.)
9. Mark underground sprinkler heads and other hidden obstacles to prevent damage.

STARTING ENGINE

⚠ WARNING ⚠

CAUTION: TO AVOID INJURY, DO NOT PLACE YOUR FEET OR OTHER BODY PARTS UNDER THE TINES WHILE STARTING THE ENGINE.

1. Turn fuel cock to the "open" position.
2. Turn choke on (closed).
3. Turn ignition switch to "on".
4. Pull recoil starter rope until engine starts.
5. After engine is warm, turn off choke (open).
6. Allow engine to run one minute before operating.
7. Check engine rpm setting before operating. DO NOT exceed 3600 rpm.

TRANSPORTING AERATOR

1. Raise tines before transporting unit across surfaces or before transporting from one work area to another by lifting up on lowering handle (see Fig. 1).
2. Aerator can be transported with the engine running or with the engine off.

TO OPERATE AERATOR

1. Start engine. (See "Starting Engine" section.)

⚠ WARNING ⚠

CAUTION: TO AVOID INJURY, DO NOT PLACE FEET OR OTHER BODY PARTS UNDER TINES WHILE STARTING THE ENGINE.

2. Make sure the rear tires are in the down position (tines not touching ground). Slowly pull back on control handle(s). (See Fig. 1.)

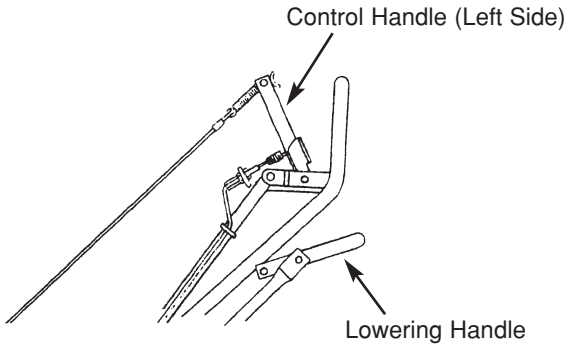

Fig. 1

3. Move Aerator to the work area. (See "Transporting Aerator" section.)
4. Upon reaching the work area, release control handle(s) and push down on lowering handle (see Fig. 1) putting tines in the turf.
5. Pull back slowly on the control handle(s) to begin aerating.
6. For maximum tine penetration into turf, apply downward pressure on handle.
7. **Models CA-18, TA-19D & TA-26D**: At the end of aerating run, release control handle and lift up on lowering handle. Turn Aerator around and repeat steps 5 and 6.
8. **Models TA-17 & TA-25**: These models have two control handles designed so it can be steered around corners, obstacles, etc. By pulling back only the left control handle, the Aerator will turn left, by pulling back only the right control handle, unit will turn right. Pull both control handles back to go straight.
9. When finished aerating, lift up on lowering handle to move wheels into transport position. (See "Transporting Aerator" section.)
10. To stop engine, take hands off control handle(s).
11. Turn off ignition switch.

GENERAL MAINTENANCE

AERATOR MAINTENANCE

TO KEEP THE AERATOR IN GOOD OPERATING CONDITION, PERFORM THE FOLLOWING:

- When replacement parts are required, use genuine Classen parts or parts with equivalent characteristics including type, strength, and material. Failure to do so may result in product malfunction and possible injury to the operator and/or bystanders.
- Any warning decal that becomes illegible should be replaced immediately. (See Pg. 5.)
- Do not operate equipment without shield(s) in place. Do not make any adjustments or perform any maintenance while the engine is running.
- Thoroughly clean all tines inside and out when aerating is completed and apply a light coat of oil to prevent rust on tines.
- Always lubricate Aerator each time it is put into service. Wipe off lubrication fittings before and after each lubrication. The number of lubrication fittings vary depending on model of Aerator.

Model CA-18 - Qty 2, one in each rear wheel assembly.

Models TA-19D/TA-26D (water drum models) - Qty 3, one in each rear wheel assembly and one on the idler/clutch arm pivot bearing. (See Fig. 2.)

Models TA-19/TA-26 (front tire models) - Qty. 5, one in each wheel assembly and one on the idler/clutch arm pivot bearing. (See Fig. 2.)

Models TA-17D/TA-25D - Qty. 4, one in each wheel assembly and one in each idler/clutch arm pivot bearing. (See Fig. 2.)

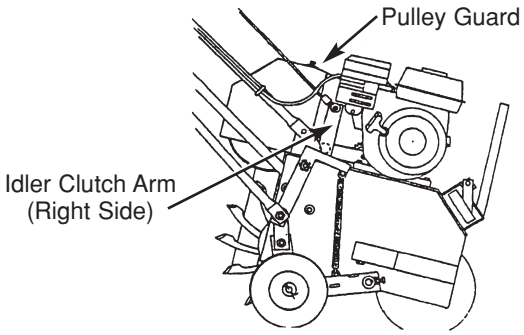

Fig. 2

- Keep drive belt(s) free of oil and dirt.

Models TA-17D/TA-25D - If belts slip due to normal belt stretch, engine can be adjusted forward within slotted holes to tighten belts.

- Check roller chain(s) for wear. Apply a light coat of No. 30 oil or penetrating chain lubricant to keep the chain(s) clean and in proper running order.
- Check roller chain(s) for tightness. Follow these steps:

Model CA-18 (See Fig.3.)

1. Disconnect spark plug.
2. Take off pulley guard by removing two nuts and lock washers.
3. Loosen nut (B) by turning counter-clockwise until nut comes in contact with head of bolt (A).
4. Tighten bolt (A) until chain is tight between front axle sprocket (D) and tine assembly sprocket (E). **(See Note Opposite Page)**
5. Retighten nut (B) by turning clockwise against lock washer (C).
6. Replace pulley guard, nuts and lock washers and retighten nuts.

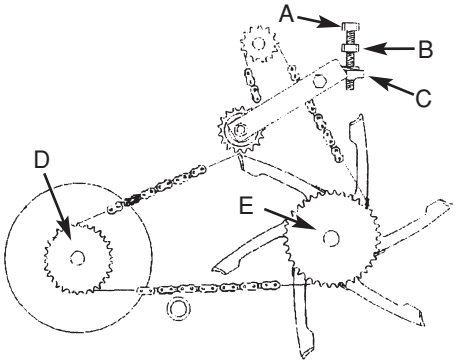

Fig. 3

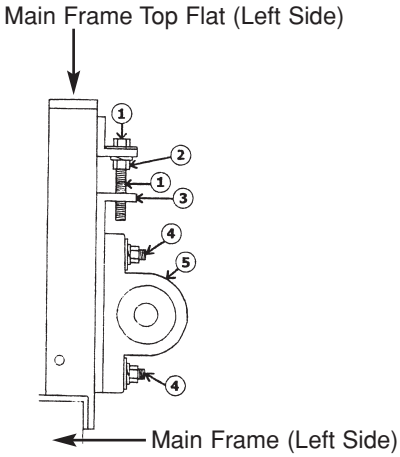

Fig. 4

Model TA-17/TA-19/TA-25/TA-26 (See Fig. 4.)

1. Disconnect spark plug.
2. Take off pulley guard (see Fig. 2) by removing bolts, etc. which attach it to the frame.
3. Loosen the bolts, nuts, lock washers, and flat washers (Key 4) to allow movement of the pillow block bearings only (Key 5). Loosen nuts only, do not remove.
4. Loosen and unthread the two 5/16" nuts (Key 2) down to top of chain tightening bracket (Key 3).
5. Turn the tap bolts (Key 1) evenly clockwise so jack shaft stays level with frame until chain(s) is/are tight.

6. When adjustment is complete, retighten the bolts (Key 4) on the pillow block bearings (Key 5) and replace the pulley guard and fasteners.

NOTE: Excessive roller chain tightness will shorten the life of the bearings. Chain(s) should have movement of 0.18 in./4mm free play back and forth at center point between front drive sprocket and rear tine assembly sprocket.

ENGINE MAINTENANCE

(Refer to engine manufacturer's owners manual) Check engine and gear reduction case oil level with engine resting in a level position. Inspect air filter element and replace if necessary.

AERATOR STORAGE

⚠ WARNING ⚠

SAFETY WARNING: TO PREVENT POSSIBLE EXPLOSION OR IGNITION OF VAPORIZED FUEL, DO NOT STORE EQUIPMENT WITH FUEL IN TANK OR CARBURETOR OR NEAR OPEN FLAME (I.E. FURNACE, WATER HEATER, PILOT LIGHT).

STORAGE INSTRUCTIONS

Before the Aerator is put into storage for any period exceeding 30 days, the following steps should be taken.

1. Drain all fuel from fuel tank and fuel lines.
2. Start engine and run until all fuel is used from carburetor float bowl.
3. While engine is still warm, drain the crankcase oil and replace with the proper weight oil corresponding to the season the Aerator will next be used.
4. Remove the spark plug and squirt a small quantity of engine oil into the cylinder. Turn the engine over a few times to distribute that oil.
5. Lubricate all lubrication fittings.

To put Aerator into operation after an extended storage:

1. Check for loose parts and tighten if necessary.
2. Check for cracked or broken tines and replace.
3. Fill fuel tank.
4. Check engine and gear reduction case oil levels (with engine in a level position).
5. Start engine.
6. Check for fuel leaks.
7. Check operation of control handle(s) to make sure unit stops when lever is released forward.
8. Aerator is equipped with fuel shut-off valve, close valve before transporting.

SAFETY DECALS

All Guards Must Be In Place While Machine Is In Operation

CA-18 COMPACT AERATOR
(S.N. 1062 & UP)
PARTS LIST

Parts Main Frame
CA-18 COMPACT AERATOR

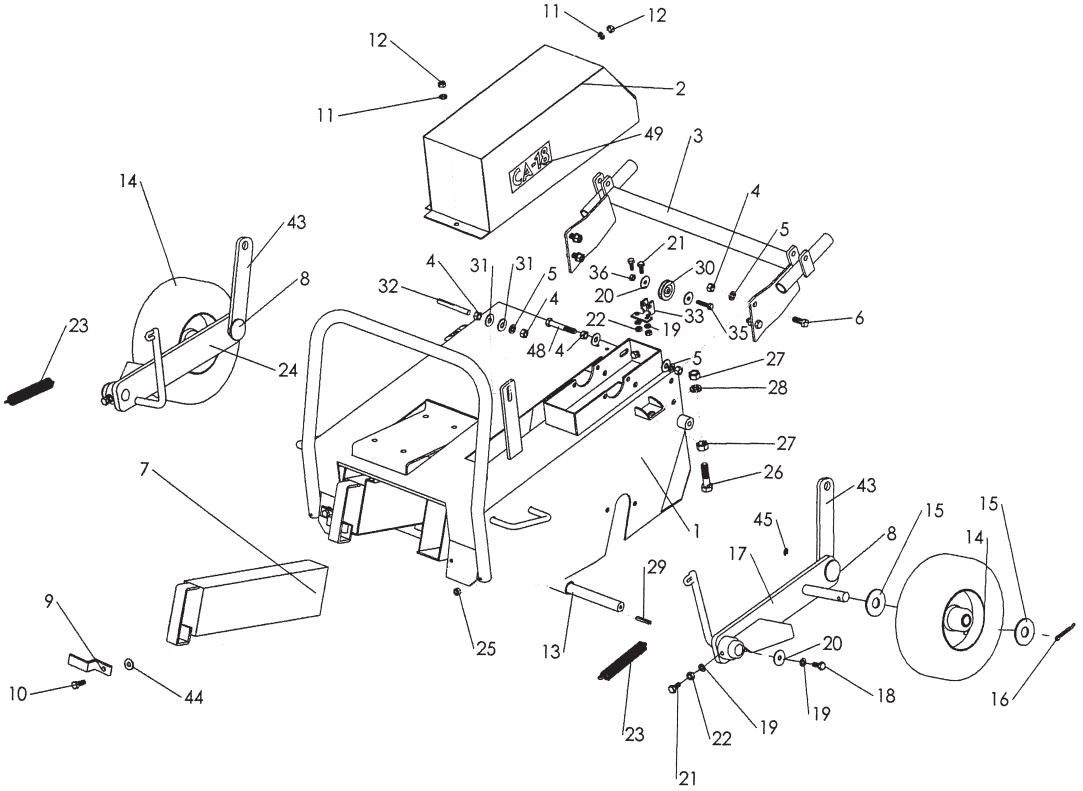

KEY	PART NO.	QTY/PER SHEET	DESCRIPTION
1	400127	1	MAIN FRAME
2	400138	1	PULLEY GUARD
3	400131	1	HANDLE MOUNT
4	500129	8	3/8" NUT
5	500130	6	3/8" LOCK WASHER
6	500043	4	3/8" x 1" BOLT
7	400126	2	WEIGHT BAR
8	300080	2	1/2" WHEEL PIVOT PIN
9	300081	2	WEIGHT STOP
10	500133	2	5/16" x 1" BOLT
11	500115	2	5/16" LOCK WASHER
12	500101	2	5/16" NUT
13	600027	1	KEYED SHAFT
14	100031	2	REAR TIRE, 8"
15	500053	4	5/8" FLAT WASHER
16	500016	2	5/32" x 1-1/4" COTTER PIN
17	400142	1	ARM, L.H. REAR AXLE SUPPORT
18	500071	2	1/4" x 5/8" FINE BOLT
19	500137	6	1/4" LOCK WASHER
20	500164	4	1/4" FENDER WASHER
21	500029	4	1/4" x 3/4" BOLT
22	500136	4	1/4" NUT
23	100250	2	SPRING

KEY	PART NO.	QTY/PER SHEET	DESCRIPTION
24	400141	1	ARM, R.H. REAR AXLE SUPPORT
25	500169	2	5/16" LOCK NUT
26	500149	2	1/2" x 2" BOLT
27	500106	4	1/2" NUT
28	500006	2	1/2" LOCK WASHER
29	500011	2	3/16" SQUARE KEY
30	100270	1	PULLEY, CLUTCH CABLE SUPPORT
31	500042	4	3/8" FLAT WASHER
32	500179	1	V-BELT GUIDE BOLT (3/8" x 2-3/4")
33	300107	2	PULLEY MOUNTING BRACKET
34	100256	2	DECAL, "CA-18"
35	500218	1	1/4" x 1-1/4" BOLT
36	500139	1	1/4" LOCK NUT
37	500154	1	3/8" x 2-3/4" BOLT
38	100055	1	DECAL, "SERIAL NUMBER" (NOT SHOWN)
39	100069	1	DECAL, "DANGER" (NOT SHOWN)
40	100073	1	LUBRICATION TAG (NOT SHOWN)
41	100074	2	DECAL, "CLASSEN" (NOT SHOWN)
42	100096	1	DECAL, "ALL GUARDS" (NOT SHOWN)
43	300079	2	WHEEL PIVOT FLAT
44	500083	2	5/16" FLAT WASHER
45	500078	2	"E" RING

Parts Power Train and Tine Rotor Assembly

CA-18 COMPACT AERATOR

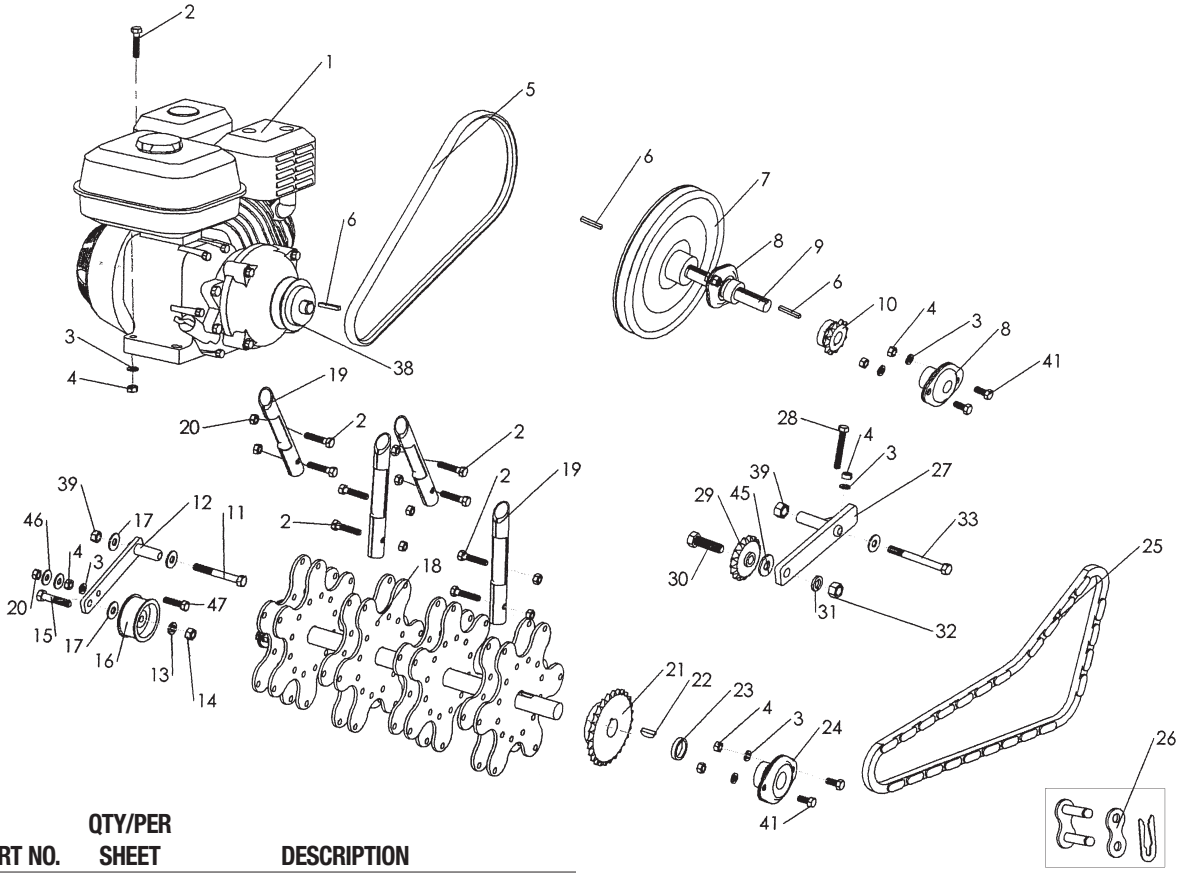

KEY	PART NO.	QTY/PER SHEET	DESCRIPTION
1	100037	1	HONDA ENGINE 4.0 HP
1	100094	1	BRIGGS & STRATTON I.C. 3.5 HP
2	500147	52	5/16" x 1-1/2" BOLT
3	500115	18	5/16" LOCK WASHER
4	500101	18	5/16" NUT
5	100255	1	BX 38 V-BELT
6	500011	3	3/16" SQUARE KEY
7	100245	1	PULLEY & HUB w/o KEY, AB x 3/4" x 9"
8	100247	4	BEARING, PLATED FLANGE w/ COLLAR, 3/4" 2 BOLT
9	200034	1	JACKSHAFT, 3/4"
10	100252	1	SPROCKET, #40 B12 x 3/4"
11	500159	1	3/8" x 2-3/4" BOLT
12	400136	1	ARM, BELT TIGHTENER
13	500130	1	3/8" LOCK WASHER
14	500129	1	3/8" NUT
15	500091	1	3/8" x 2" BOLT
16	100010	1	IDLER PULLEY
17	500042	3	3/8" FLAT WASHER
18	700023	1	TINE SHAFT ASSEMBLY
19	100032	24	TINE
20	500169	50	5/16" LOCK NUT
21	100253	1	SPROCKET, #40 B27 x 1"
22	500003	1	1/4" x 7/8" HALF MOON KEY
23	300073	1	SPACER, TINE SHAFT
24	100248	2	BEARING, PLATED FLANGE w/ COLLAR, 1" 2 BOLT
25	100254	1	CHAIN, #40 x 109 PITCH
26	100025	1	CONNECTING LINK
27	400137	1	ARM, CHAIN TIGHTENER
28	500114	1	5/16" x 2-1/4" TAP BOLT
29	100043	1	IDLER SPROCKET

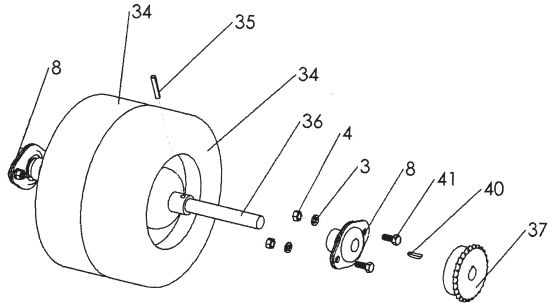

KEY	PART NO.	QTY/PER SHEET	DESCRIPTION
30	500174	1	1/2" x 1-3/4" BOLT
31	500006	1	1/2" LOCK WASHER
32	500106	1	1/2" NUT
33	500175	1	3/8" x 3-3/4" BOLT
34	100246	2	TIRE & WHEEL, 10 x 3W
35	500172	2	ROLL PIN, 1/4" x 1-1/2"
36	600026	1	AXLE, FRONT DRIVE
37	100249	1	SPROCKET, #40 B21 x 3/4"
38	100038	1	PULLEY w/ 3/4" HUB, 3/4" x 3"
39	500041	2	3/8" LOCK NUT
40	500173	1	KEY, 3/16" x 7/8" HALF MOON
41	500140	12	5/16" x 3/4" BOLT
42	100263	1	DEFLECTOR, HONDA ENG. (NOT SHOWN)
43	100264	1	DEFLECTOR, B&S ENG. (NOT SHOWN)
44	100265	2	SCREWS, DEFLECTOR
45	500034	1	1/2" FLAT WASHER
46	500083	2	5/16" FLAT WASHER
47	500073	1	5/16" x 1-1/4" BOLT

Parts Handle and Control

CA-18 COMPACT AERATOR

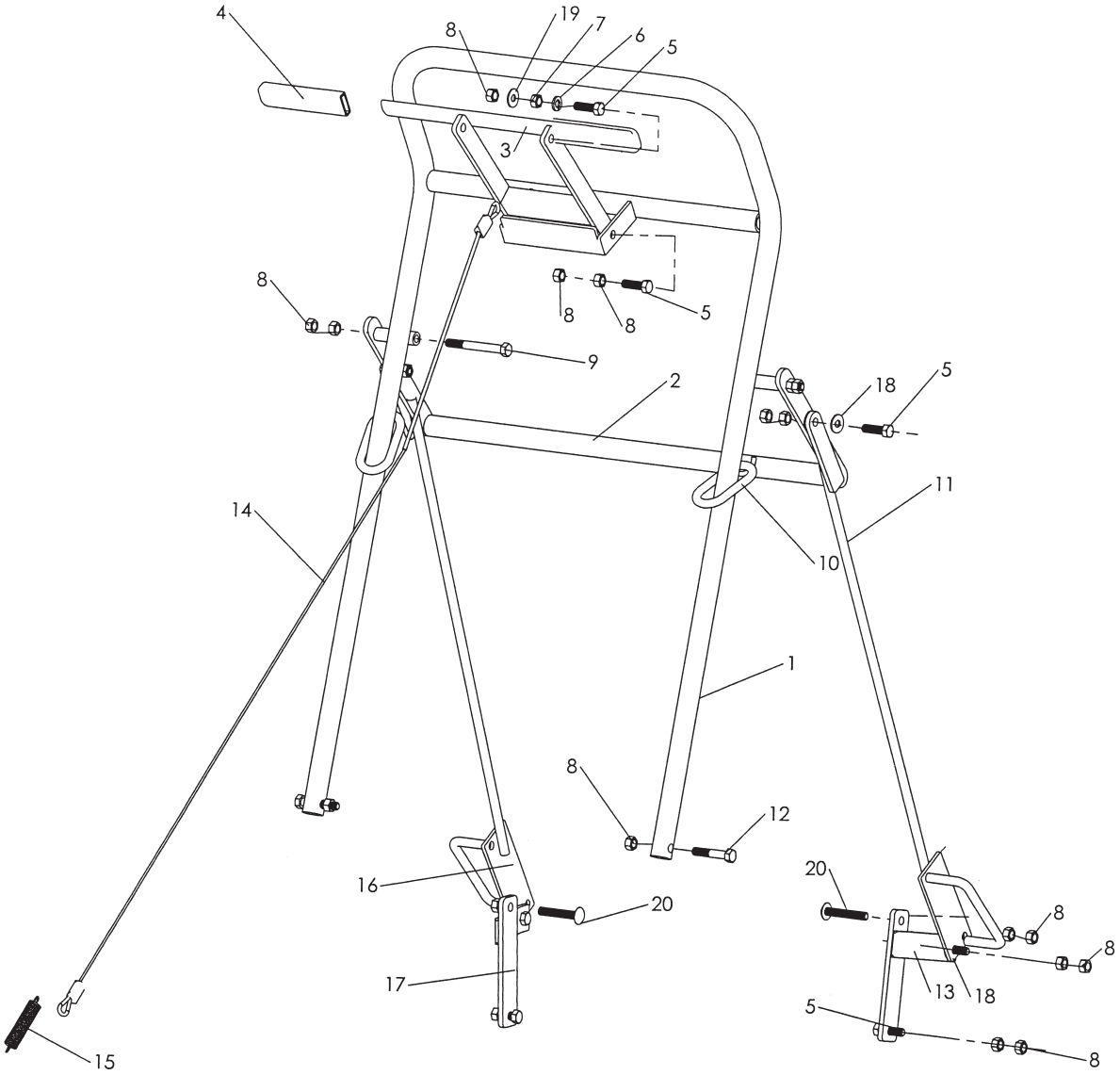

KEY	PART NO.	QTY/PER SHEET	DESCRIPTION
1	400128	1	MAIN HANDLE
2	400017	1	LOWERING HANDLE
3	400180	1	CONTROL HANDLE
4	100007	2	RUBBER GRIP
5	500134	9	3/8" x 1-1/4" BOLT
6	500130	1	3/8" LOCK WASHER
7	500129	1	3/8" NUT
8	500041	27	3/8" LOCK NUT
9	500178	2	3/8" x 3-1/4" BOLT
10	100251	2	HANDLE LOCK RING

KEY	PART NO.	QTY/PER SHEET	DESCRIPTION
11	400130	1	ARM, L.H. LINKAGE
12	500091	4	3/8" x 2" BOLT
13	400133	1	LH LINKAGE PIVOT
14	200035	1	CLUTCH CABLE
15	100034	1	SPRING
16	400129	1	ARM, R.H. LINKAGE
17	400132	1	RH LINKAGE PIVOT
18	500042	4	3/8" FLAT WASHER
19	500083	4	5/16" FLAT WASHER
20	500204	2	3/8" x 2-1/4" CARRIAGE BOLT

TA-17D SPLIT-DRIVE AERATOR
(S.N. 100 & UP)
PARTS LIST

Parts
Main Frame

TA-17D
SPLIT-DRIVE AERATOR

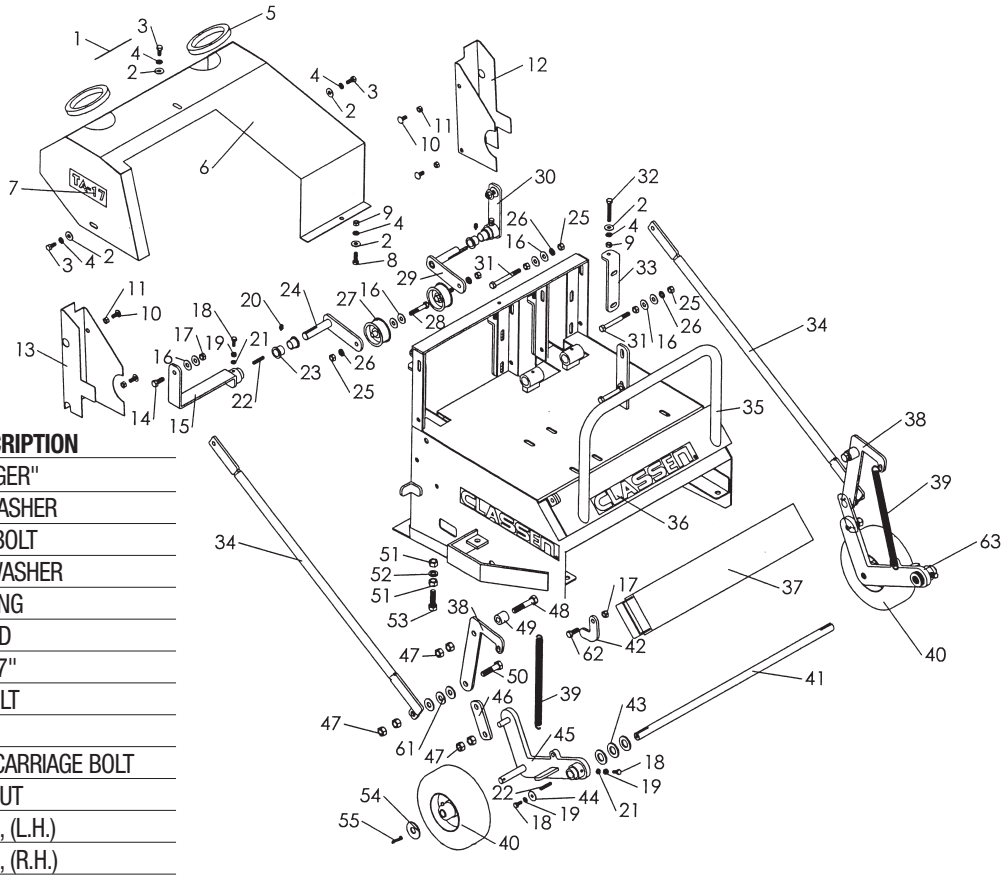

KEY	PART NO.	QTY/PER SHEET	DESCRIPTION
1	100069	1	DECAL, "DANGER"
2	500083	8	5/16" FLAT WASHER
3	500140	3	5/16" x 3/4" BOLT
4	500115	8	5/16" LOCK WASHER
5	100419	2	RUBBER EDGING
6	400093	1	PULLEY GUARD
7	100153	2	DECAL, "TA-17"
8	500133	1	5/16" x 1" BOLT
9	500101	5	5/16" NUT
10	500163	4	5/16" x 3/4" CARRIAGE BOLT
11	500169	4	5/16" LOCK NUT
12	400071	1	CHAIN GUARD, (L.H.)
13	400089	1	CHAIN GUARD, (R.H.)
14	500134	2	3/8" x 1-1/4" BOLT
15	400086	1	CLUTCH ARM, (R.H.)
16	500042	12	3/8" FLAT WASHER
17	500041	2	3/8" LOCK NUT
18	500029	4	1/4" x 3/4" BOLT
19	500136	4	1/4" NUT
20	500001	2	1/4" x 28 GREASE FITTING
21	500137	4	1/4" LOCK WASHER
22	500011	4	3/16" x 1" SQ. KEY
23	100021	4	BRASS BUSHING
24	400021	1	IDLER ARM, (R.H.)
25	500129	7	3/8" NUT
26	500130	4	3/8" LOCK WASHER
27	100010	2	IDLER PULLEY
28	500091	2	3/8" x 2" BOLT
29	400087	1	IDLER ARM, (L.H.)
30	400020	1	CLUTCH ARM, (L.H.)
31	500170	3	3/8" x 3-1/2" BOLT
32	500114	4	5/16" x 2-1/4" TAP BOLT
33	300049	4	CHAIN TIGHTENING PLATE
34	300007	2	LINKAGE ARM
35	400080	1	TA-17D MAIN FRAME
36	100074	3	DECAL, "CLASSEN"
37	400056	1	WEIGHT BAR
38	400015	2	SPRING ARM
39	100040	2	FRAME SPRING

KEY	PART NO.	QTY/PER SHEET	DESCRIPTION
40	100031	2	8" REAR TIRE ASSEMBLY
41	200007	1	KEYED SHAFT
42	300009	1	WEIGHT STOP FLAT
43	500194	6	3/4" FLAT WASHER
44	500164	2	1/4" FENDER WASHER
45	400013	1	REAR AXLE SUPPORT ARM, (L.H.)
46	300006	2	PIVOT FLAT
47	500131	12	1/2" LOCK NUT
48	500135	2	1/2" x 2-1/2" BOLT
49	300005	2	BUSHING SPACER
50	500149	2	1/2" x 2" BOLT
51	500106	4	1/2" NUT
52	500006	2	1/2" LOCK WASHER
53	500174	2	1/2" x 1-3/4" BOLT
54	500053	2	5/8" FLAT WASHER
55	500016	2	5/32" x 1-1/4" COTTER PIN
56	100096	1	DECAL, "ALL GUARDS" (N.S.)
57	100157	2	DECAL, "SPLIT-DRIVE" (N.S.)
58	100055	1	DECAL, "SERIAL NUMBER" (N.S.)
59	100257	1	DECAL, "PATENT" (N.S.)
60	100073	1	LUBRICATION TAG (N.S.)
61	500034	6	1/2" FLAT WASHER
62	500043	1	3/8" x 1" BOLT
63	400014	1	REAR AXLE SUPPORT ARM, (R.H.)

Parts Power Train Assembly

TA-17D SPLIT-DRIVE AERATOR

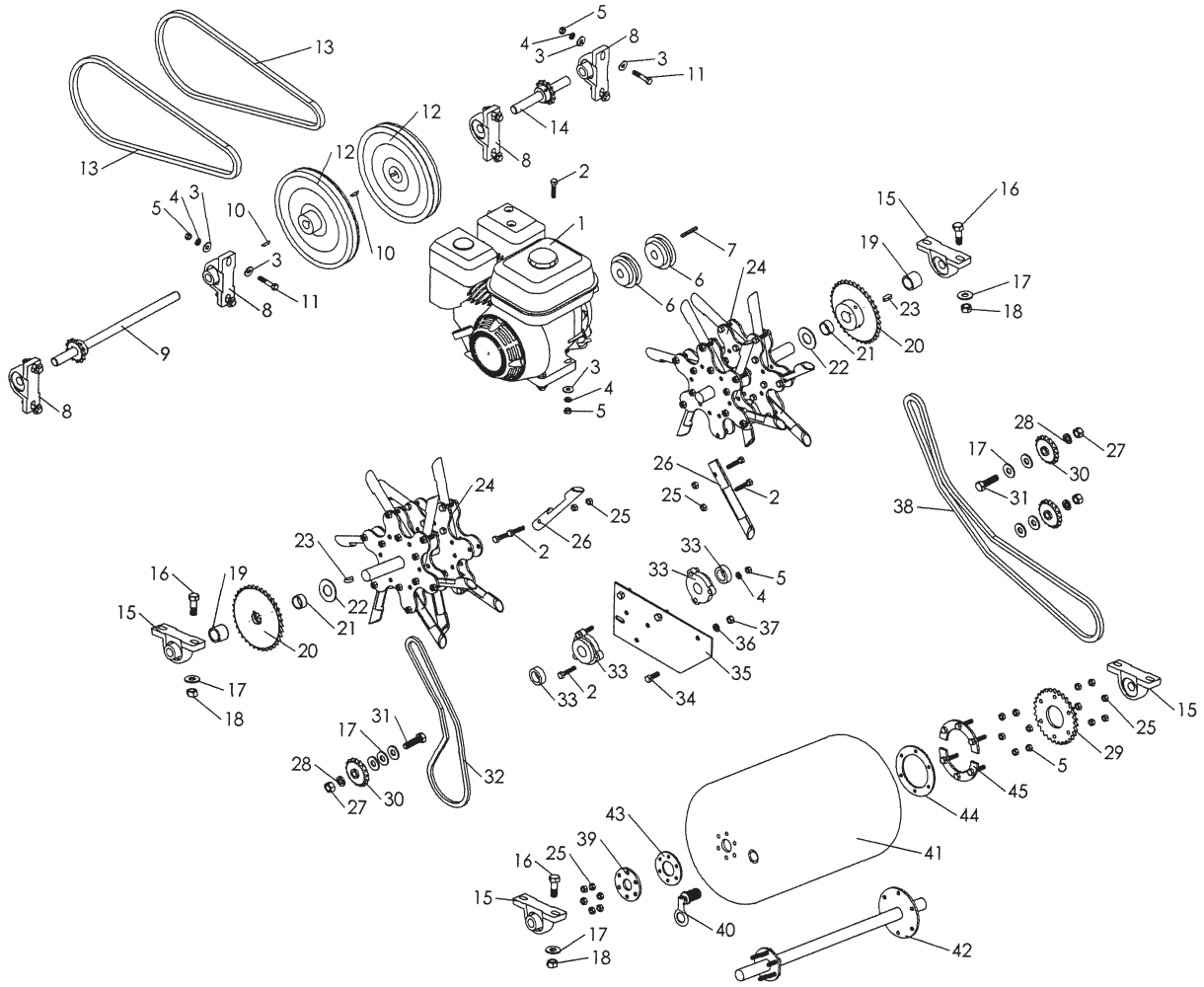

KEY	PART NO.	QTY/PER SHEET	DESCRIPTION
1	100037	1	4.0 HP HONDA ENGINE
2	500147	60	5/16" x 1-1/2" BOLT
3	500083	20	5/16" FLAT WASHER
4	500115	15	5/16" LOCK WASHER
5	500101	21	5/16" NUT
6	100420	2	3" x 3/4" PULLEY w/ HUB
7	500231	1	3/16" x 1-3/4" SQ. KEY
8	100013	4	3/4" BEARING w/ COLLAR
9	200024	1	JACK SHAFT ASSEMBLY, (R.H.)
10	500173	2	3/16" x 7/8" HALF MOON KEY
11	500074	8	5/16" x 1-3/4" BOLT
12	100245	2	9" PULLEY & HUB w/o KEY
13	100150	2	BX-45 V-BELT
14	200023	1	JACK SHAFT ASSEMBLY, (L.H.)
15	100004	4	1" BEARING w/ COLLAR
16	500150	8	1/2" x 1-1/2" BOLT
17	500034	15	1/2" FLAT WASHER
18	500131	8	1/2" LOCK NUT
19	300132	2	1" OUTSIDE SPACER
20	200009	2	#40 x 36 SPROCKET & HUB
21	300011	2	OUTSIDE DRUM SHAFT SPACER
22	300131	2	2" MACHINERY WASHER
23	500003	2	1/4" x 7/8" HALF MOON KEY

KEY	PART NO.	QTY/PER SHEET	DESCRIPTION
24	700018	2	TINE DISC SHAFT ASSEMBLY
25	500169	60	5/16" LOCK NUT
26	100032	24	PLUGGING TINE
27	500106	3	1/2" NUT
28	500006	3	1/2" LOCK WASHER
29	200015	1	#40 x 30 SPROCKET
30	100043	3	IDLER SPROCKET
31	500174	2	1/2" x 1-3/4" BOLT
32	100151	1	#40 x 75 PITCH CHAIN w/ LINK
33	100155	2	1" 3-BOLT FLANGE BEARING w/ COLLAR
34	500043	3	3/8" x 1" BOLT
35	300057	1	3/16" LOWER PLATE
36	500130	3	3/8" LOCK WASHER
37	500129	3	3/8" NUT
38	100108	1	#40 x 139 PITCH CHAIN
39	100083	1	SMALL STEEL WASHER
40	100109	1	WATER DRUM PLUG
41	100085	1	WATER DRUM
42	700009	1	DRUM AXLE
43	100087	1	SMALL RUBBER GASKET
44	100084	1	LARGE RUBBER GASKET
45	700011	2	INNER HALF-PLATE w/ STUDS

Parts Handle and Control Assembly

TA-17D SPLIT-DRIVE AERATOR

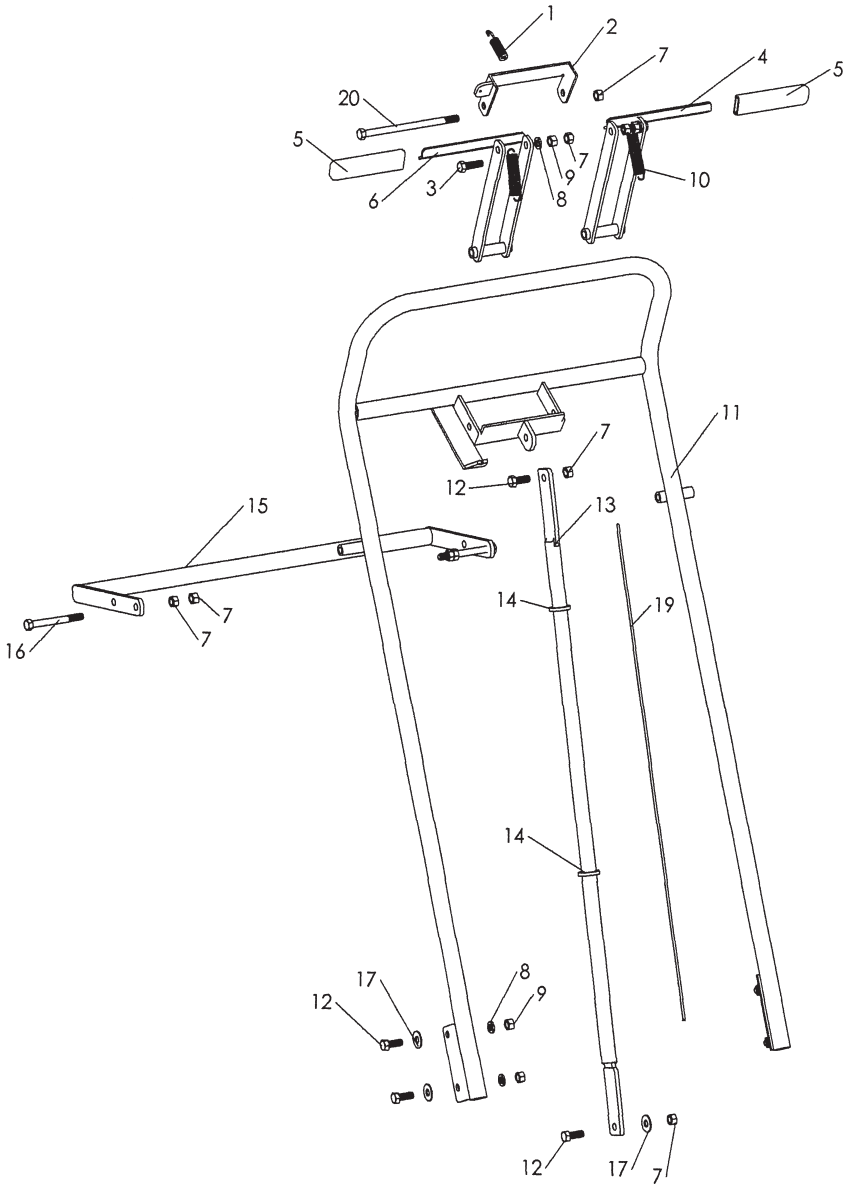

KEY	PART NO.	QTY/PER SHEET	DESCRIPTION
1	100035	1	THROTTLE CABLE CONNECTING SPRING
2	400088	1	THROTTLE ARM
3	500134	2	3/8" x 1-1/4" BOLT
4	400082	1	CONTROL HANDLE, (L.H.)
5	100007	2	RUBBER GRIP
6	400091	1	CONTROL HANDLE, (R.H.)
7	500041	9	3/8" LOCK NUT
8	500130	6	3/8" LOCK WASHER
9	500129	6	3/8" NUT
10	100034	2	CLUTCH CABLE SPRING

KEY	PART NO.	QTY/PER SHEET	DESCRIPTION
11	400018	1	MAIN HANDLE
12	500043	6	3/8" x 1" BOLT
13	300054	1	HANDLE BRACE
14	100020	2	PLASTIC TIE
15	400017	1	LOWERING HANDLE
16	500170	2	3/8" x 3-1/2" BOLT
17	500042	4	3/8" FLAT WASHER
18	200020	2	CLUTCH CABLE (NOT SHOWN)
19	100149	1	THROTTLE CABLE w/ CONNECTING ENDS
20	500162	1	3/8" x 6-1/2" BOLT

TA-25D SPLIT-DRIVE AERATOR
(S.N. 100 & UP)
PARTS LIST

Parts
Main Frame

TA-25D
SPLIT-DRIVE AERATOR

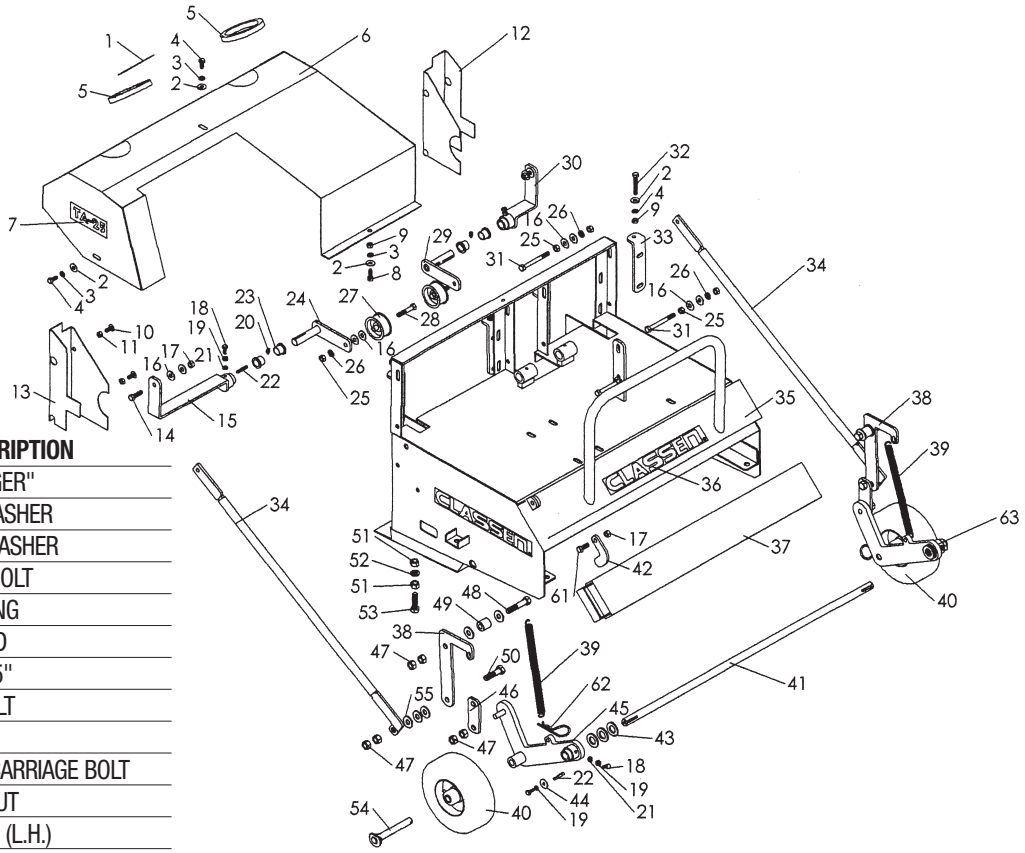

KEY	PART NO.	QTY/PER SHEET	DESCRIPTION
1	100069	1	DECAL, "DANGER"
2	500083	8	5/16" FLAT WASHER
3	500115	8	5/16" LOCK WASHER
4	500140	3	5/16" x 3/4" BOLT
5	100419	2	RUBBER EDGING
6	400092	1	PULLEY GUARD
7	100152	2	DECAL, "TA-25"
8	500133	1	5/16" x 1" BOLT
9	500101	5	5/16" NUT
10	500163	4	5/16" x 3/4" CARRIAGE BOLT
11	500169	4	5/16" LOCK NUT
12	400071	1	CHAIN GUARD, (L.H.)
13	400089	1	CHAIN GUARD, (R.H.)
14	500134	2	3/8" x 1-1/4" BOLT
15	400085	1	CLUTCH ARM, (R.H.)
16	500042	12	3/8" FLAT WASHER
17	500041	2	3/8" LOCK NUT
18	500029	4	1/4" x 3/4" BOLT
19	500136	4	1/4" NUT
20	500001	2	1/4" x 28 GREASE FITTING
21	500137	4	1/4" LOCK WASHER
22	500011	4	3/16" x 1" SQ. KEY
23	100021	4	BRASS BUSHING
24	400021	1	IDLER ARM, (R.H.)
25	500129	7	3/8" NUT
26	500130	4	3/8" LOCK WASHER
27	100010	2	IDLER PULLEY
28	500091	2	3/8" x 2" BOLT
29	400087	1	IDLER ARM, (L.H.)
30	400083	1	CLUTCH ARM, (L.H.)
31	500170	2	3/8" x 3-1/2" BOLT
32	500114	4	5/16" x 2-1/4" TAP BOLT
33	300049	4	CHAIN TIGHTENING PLATE
34	300007	2	LINKAGE ARM
35	400079	1	TA-25D MAIN FRAME
36	100074	3	DECAL, "CLASSEN"
37	400057	1	WEIGHT BAR
38	400015	2	SPRING ARM
39	100040	2	FRAME SPRING

KEY	PART NO.	QTY/PER SHEET	DESCRIPTION
40	100031	2	8" REAR TIRE ASSEMBLY
41	200012	1	KEYED SHAFT
42	300009	1	WEIGHT STOP FLAT
43	500194	6	3/4" FLAT WASHER
44	500164	2	1/4" FENDER WASHER
45	400026	1	REAR AXLE SUPPORT ARM, (R.H.)
46	300006	2	PIVOT FLAT
47	500131	12	1/2" LOCK NUT
48	500135	2	1/2" x 2-1/2" BOLT
49	300005	2	BUSHING SPACER
50	500149	2	1/2" x 2" BOLT
51	500106	4	1/2" NUT
52	500006	2	1/2" LOCK WASHER
53	500174	2	1/2" x 1-3/4" BOLT
54	300002	2	AXLE PIN
55	500034	8	1/2" FLAT WASHER
56	100096	1	DECAL, "ALL GUARDS" (N.S.)
57	100157	2	DECAL, "SPLIT-DRIVE" (N.S.)
58	100055	1	DECAL, "SERIAL NUMBER" (N.S.)
59	100257	1	DECAL, "PATENT" (N.S.)
60	100073	1	LUBRICATION TAG (N.S.)
61	500043	1	3/8" x 1" BOLT
62	500096	2	5/32" x 3" BRIDGE PIN CLIP
63	400025	1	REAR AXLE SUPPORT ARM, (L.H.)
64	500165	1	3/8" x 4-1/2" BOLT

Parts Power Train Assembly

TA-25D SPLIT-DRIVE AERATOR

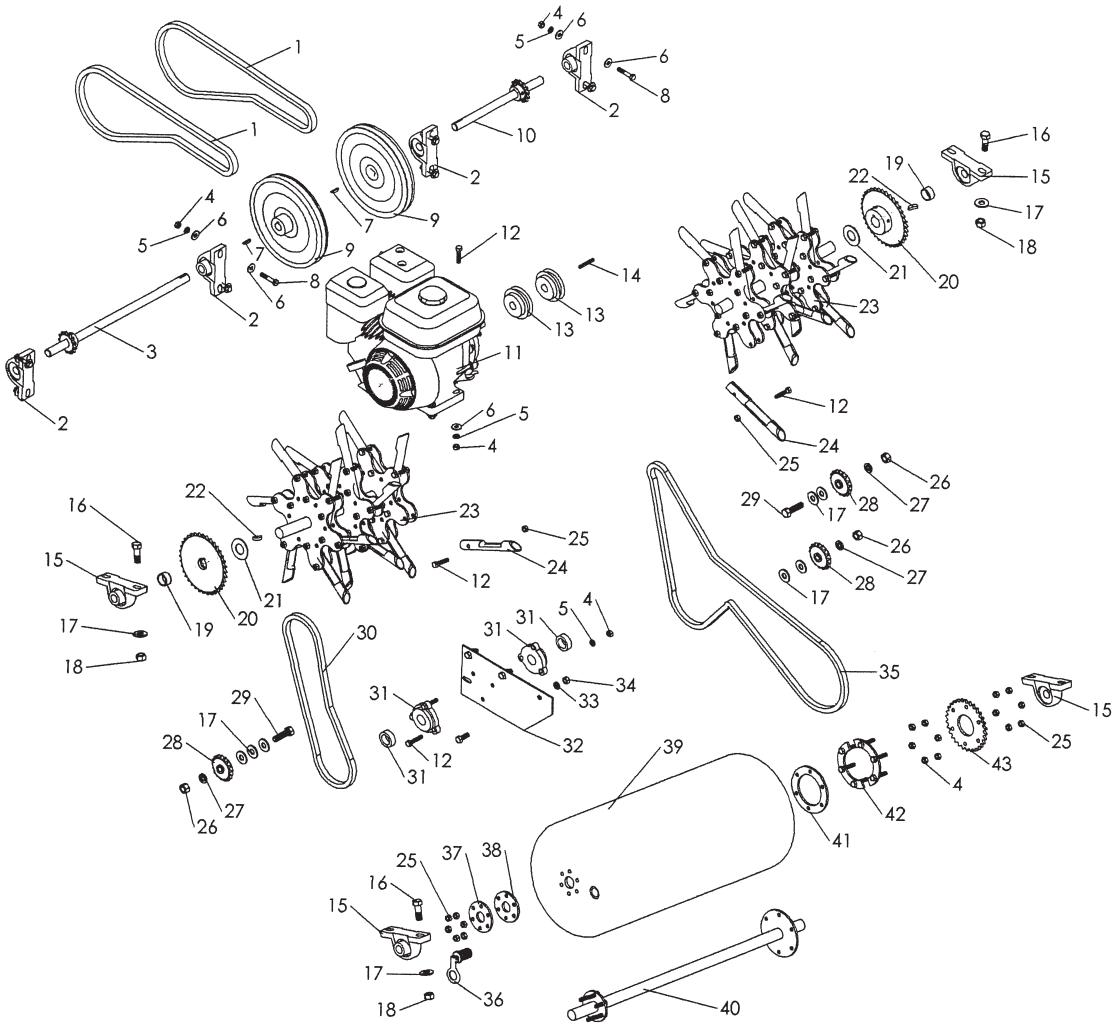

KEY	PART NO.	QTY/PER SHEET	DESCRIPTION
1	100150	2	BX-45 V-BELT
2	100013	4	3/4" BEARING w/ COLLAR
3	200022	1	JACK SHAFT ASSEMBLY, (R.H.)
4	500101	21	5/16" NUT
5	500115	15	5/16" LOCK WASHER
6	500083	20	5/16" FLAT WASHER
7	500173	2	3/16" x 7/8" HALF MOON KEY
8	500074	8	5/16" x 1-3/4" BOLT
9	100245	2	9" PULLEY & HUB w/o KEY
10	200021	1	JACK SHAFT ASSEMBLY, (L.H.)
11	100037	1	4.0 HP HONDA ENGINE
12	500147	79	5/16" x 1-1/2" BOLT
13	100420	2	3" x 3/4" PULLEY w/ HUB
14	500231	1	3/16" x 1-3/4" SQ. KEY
15	100004	4	1" BEARING w/ COLLAR
16	500150	8	1/2" x 1-1/2" BOLT
17	500034	15	1/2" FLAT WASHER
18	500131	8	1/2" LOCK NUT
19	300011	2	OUTSIDE DRUM SHAFT SPACER
20	200009	2	#40 x 36 SPROCKET & HUB
21	300131	2	2" MACHINERY WASHER
22	500003	2	1/4" x 7/8" HALF MOON KEY

KEY	PART NO.	QTY/PER SHEET	DESCRIPTION
23	700017	2	TINE DISC SHAFT ASSEMBLY
24	100032	36	PLUGGING TINE
25	500169	84	5/16" LOCK NUT
26	500106	3	1/2" NUT
27	500006	3	1/2" LOCK WASHER
28	100043	3	IDLER PULLEY
29	500174	2	1/2" x 1-3/4" BOLT
30	100151	1	#40 x 75 PITCH CHAIN w/ LINK
31	100155	2	1" 3-BOLT FLANGE BEARING w/ COLLAR
32	300057	1	3/16" LOWER PLATE
33	500130	3	3/8" LOCK WASHER
34	500129	3	3/8" NUT
35	100108	1	#40 x 139 PITCH CHAIN
36	100109	1	WATER DRUM PLUG
37	100083	1	SMALL STEEL WASHER
38	100087	1	SMALL RUBBER GASKET
39	100086	1	WATER DRUM
40	700010	1	DRUM AXLE
41	100084	1	LARGE RUBBER GASKET
42	700011	2	INNER HALF-PLATE w/ STUDS
43	200015	1	#40 x 30 SPROCKET

Parts Handle and Control Assembly

TA-25D SPLIT-DRIVE AERATOR

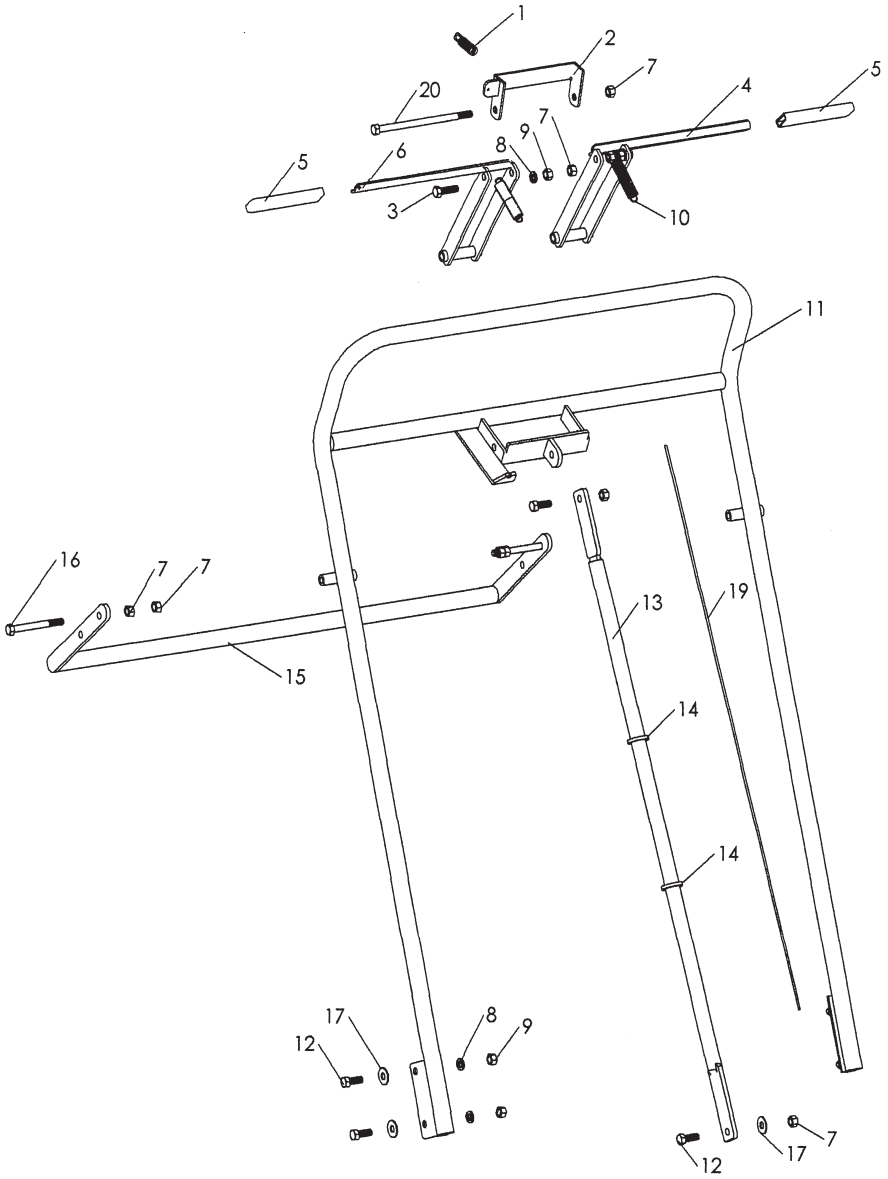

KEY	PART NO.	QTY/PER SHEET	DESCRIPTION
1	100035	1	THROTTLE CABLE CONNECTING SPRING
2	400088	1	THROTTLE ARM
3	500134	2	3/8" x 1-1/4" BOLT
4	400081	1	CONTROL HANDLE (L.H.)
5	100007	2	RUBBER GRIP
6	400090	1	CONTROL HANDLE (R.H.)
7	500041	9	3/8" LOCK NUT
8	500130	6	3/8" LOCK WASHER
9	500129	6	3/8" NUT
10	100034	2	CLUTCH CABLE SPRING

KEY	PART NO.	QTY/PER SHEET	DESCRIPTION
11	400028	1	MAIN HANDLE
12	500043	6	3/8" x 1" BOLT
13	300054	1	HANDLE BRACE
14	100020	2	PLASTIC TIE
15	400027	1	LOWERING HANDLE
16	500170	2	3/8" x 3-1/2" BOLT
17	500042	4	3/8" FLAT WASHER
18	200020	2	CLUTCH CABLE, (NOT SHOWN)
19	100149	1	THROTTLE CABLE w/ CONNECTING ENDS
20	500162	1	3/8" x 6-1/2" BOLT

TA-19D TURF AERATOR
(S.N. 000540 & UP)
PARTS LIST

Left Side View

(Shown without Pulley Guard)

TA-19D TURF AERATOR

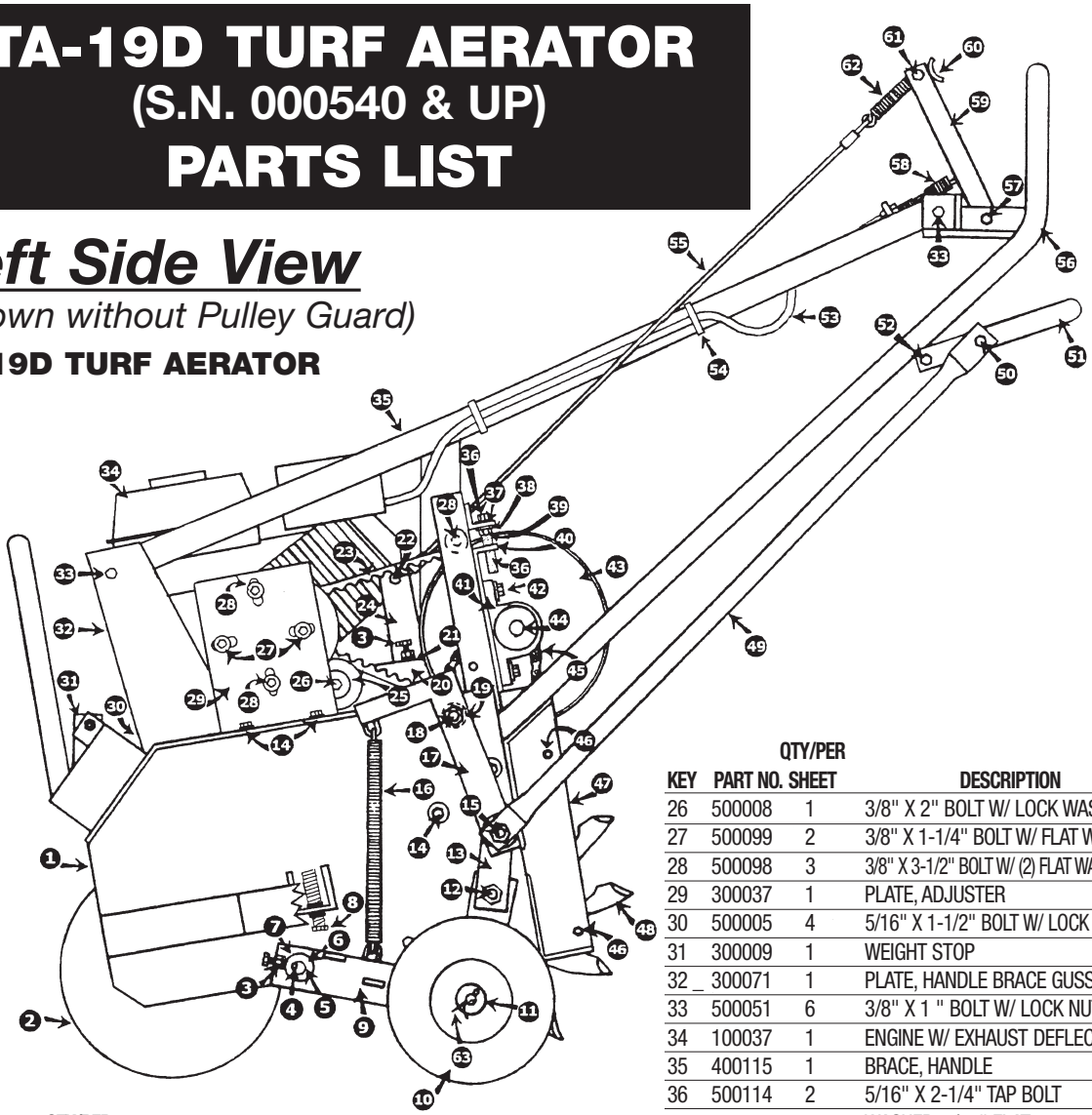

KEY	PART NO.	QTY/PER SHEET	DESCRIPTION
1	400072	1	FRAME, MAIN
2	100085	1	DRUM, WATER
3	500015	3	1/4" X 3/4" BOLT W/ LOCK WASHER & NUT
4	500011	6	KEY, 3/16" X 1" SQUARE
5	200007	1	SHAFT, KEYED
6	500054	2	WASHER, (3) 3/4" FLAT
7	500109	2	1/4"-28 X 5/8" BOLT W/ FENDER WASHER & LOCK WASHER
8	500044	2	1/2" X 1-3/4" BOLT W/ LOCK WASHER & (2) NUTS
9	400013	1	ARM, L.H. REAR AXLE SUPPORT
10	100031	2	TIRE ASSEMBLY, 8" REAR
11	500053	2	WASHER, 5/8" FLAT
12	500131	4	NUT, 1/2" LOCK
13	300006	2	FLAT, PIVOT
14	500060	6	3/8" X 1" BOLT W/ FLAT WASHER, LOCK WASHER & NUT
15	500046	2	1/2" X 2" BOLT W/ (3) FLAT WASHERS & (2) LOCK NUTS
16	100040	2	SPRING, FRAME
17	400015	2	ARM, SPRING
18	500047	2	1/2" X 2-1/2" BOLT W/ (2) LOCK NUTS
19	300005	2	SPACER, BUSHING
20	400021	1	ARM, IDLER
21	500001	1	GREASE FITTING, 1/4" X 28
22	500107	1	3/8" X 1" BOLT W/ (2) FLAT WASHERS & LOCK NUT
23	100039	1	V-BELT, BX43
24	400020	1	ARM, CLUTCH
25	100010	1	PULLEY, IDLER
26	500008	1	3/8" X 2" BOLT W/ LOCK WASHER & NUT
27	500099	2	3/8" X 1-1/4" BOLT W/ FLAT WASHER, LOCK WASHER & NUT
28	500098	3	3/8" X 3-1/2" BOLT W/ (2) FLAT WASHERS, LOCK WASHER & (2) NUTS
29	300037	1	PLATE, ADJUSTER
30	500005	4	5/16" X 1-1/2" BOLT W/ LOCK WASHER & NUT (NOT SHOWN)
31	300009	1	WEIGHT STOP
32 _	300071	1	PLATE, HANDLE BRACE GUSSET
33	500051	6	3/8" X 1 " BOLT W/ LOCK NUT
34	100037	1	ENGINE W/ EXHAUST DEFLECTOR, 4HP HONDA
35	400115	1	BRACE, HANDLE
36	500114	2	5/16" X 2-1/4" TAP BOLT
37	500083	2	WASHER, 5/16" FLAT
38	500115	2	WASHER, 5/16" LOCK
39	500101	2	NUT, 5/16"
40	300049	2	PLATE, CHAIN TIGHTENING
41	100013	2	BEARING W/ COLLAR, 3/4" PILLOW BLOCK
42	500010	4	5/16" X 1-3/4" BOLT W/ (2) FLAT WASHERS, LOCK WASHER & NUT
43	100041	1	9" PULLEY W/ 3/4" HUB & 3/16" SQ. KEY
44	200006	1	JACK SHAFT W/ #40 X 13 SPROCKET & HUB
45	100108	1	CHAIN, #40 X 139 PITCH
46	500124	2	5/16" X 3/4" CARRIAGE BOLT W/ LOCK NUT
47	400071	1	GUARD, CHAIN
48	100032	30	TINE, PLUGGING
49	300007	2	ARM, LINKAGE
50	500049	2	3/8" X 1-1/4" BOLT W/ FLAT WASHER & (2) LOCK NUTS
51	400017	1	HANDLE, LOWERING
52	500048	2	3/8" X 3-1/2" BOLT W/ (2) LOCK NUTS
53	100036	1	CABLE W/ CONNECTING ENDS, THROTTLE
54	100020	2	TIE, PLASTIC
55	200008	1	CABLE, CLUTCH
56	400018	1	HANDLE, MAIN
57	500050	2	3/8" X 1-1/4" BOLT W/ (2) LOCK NUTS
58	100035	1	SPRING, THROTTLE CABLE CONNECTING
59	400019	1	HANDLE, CONTROL
60	100033	2	GRIP, 1/8" X 1"
61	500055	1	3/8" X 1-1/4" BOLT W/ LOCK WASHER, LOCK NUT & NUT
62	100034	1	SPRING, CLUTCH CABLE
63	500016	2	COTTER PIN, 5/32" X 1-1/4"

Right Side View

TA-19D TURF AERATOR

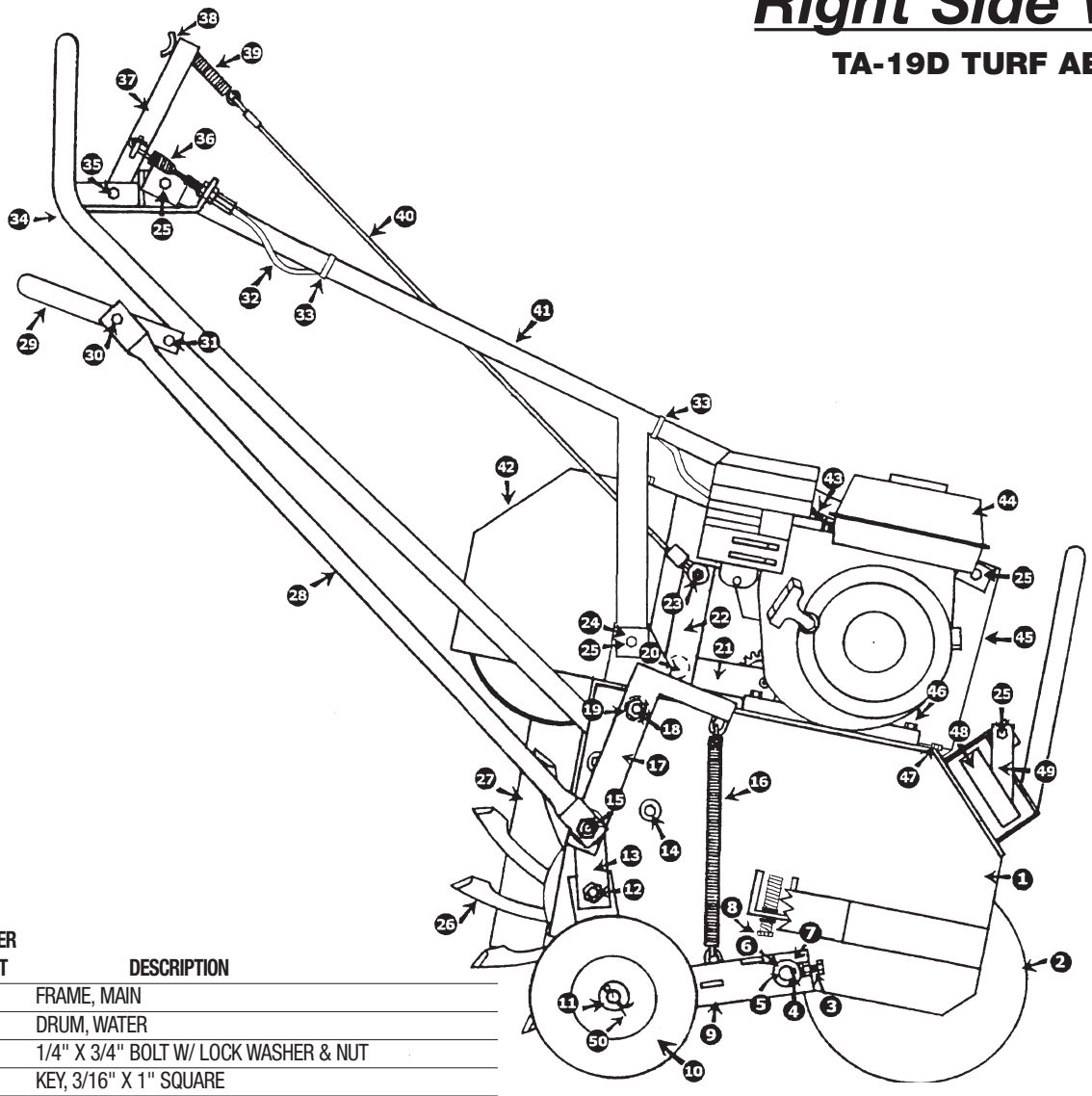

KEY	PART NO.	QTY/PER SHEET	DESCRIPTION
1	400072	1	FRAME, MAIN
2	100085	1	DRUM, WATER
3	500015	3	1/4" X 3/4" BOLT W/ LOCK WASHER & NUT
4	500011	6	KEY, 3/16" X 1" SQUARE
5	200007	1	SHAFT, KEYED
6	500054	2	WASHER, (3) 3/4" FLAT
7	500109	2	1/4"-28 X 5/8" BOLT W/ FENDER WASHER & LOCK WASHER
8	500044	2	1/2" X 1-3/4" BOLT W/ LOCK WASHER & 2 NUTS
9	400014	1	ARM, R.H. REAR AXLE SUPPORT
10	100031	2	TIRE ASSEMBLY, 8" REAR
11	500053	2	WASHER, 5/8" FLAT
12	500131	4	NUT, 1/2" LOCK
13	300006	2	FLAT, PIVOT
14	500060	6	3/8" X 1" BOLT W/ FLAT WASHER, LOCK WASHER & NUT
15	500046	2	1/2" X 2" BOLT W/ (3) FLAT WASHERS & (2) LOCK NUTS
16	100040	2	SPRING, FRAME
17	400015	2	ARM, SPRING
18	500047	2	1/2" X 2-1/2" BOLT W/ (2) LOCK NUTS
19	300005	2	SPACER, BUSHING
20	100021	2	BUSHING, BRASS
21	400021	1	ARM, IDLER
22	400020	1	ARM, CLUTCH
23	500107	1	3/8" X 1" BOLT W/ 2 FLAT WASHERS & LOCK NUT
24	500042	1	WASHER, 3/8" FLAT
25	500051	6	3/8" X 1" BOLT W/ LOCK NUT
26	100032	30	TINE, PLUGGING
27	400071	1	GUARD, CHAIN
28	300007	2	ARM, LINKAGE
29	400017	1	HANDLE, LOWERING
30	500049	2	3/8" X 1-1/4" BOLT W/ FLAT WASHER & (2) LOCK NUTS

KEY	PART NO.	QTY/PER SHEET	DESCRIPTION
31	500048	2	3/8" X 3-1/2" BOLT W/ (2) LOCK NUTS
32	100036	1	CABLE W/ CONNECTING ENDS, THROTTLE
33	100020	2	TIE, PLASTIC
34	400018	1	HANDLE, MAIN
35	500050	2	3/8" X 1-1/4" BOLT W/ (2) LOCK NUTS
36	100035	1	SPRING, THROTTLE CABLE CONNECTING
37	400019	1	HANDLE, CONTROL
38	100033	2	GRIP, 1/8" X 1"
39	100034	1	SPRING, CLUTCH CABLE
40	200008	1	CABLE, CLUTCH
41	400115	1	BRACE, HANDLE
42	400022	1	PULLEY GUARD W/ (3) 5/16" X 3/4" BOLTS, (3) FLAT WASHERS, (3) LOCK WASHERS & NUT
43	100027	1	SPRING, THROTTLE
44	100037	1	ENGINE W/ EXHAUST DEFLECTOR, 4HP HONDA
45	300071	1	PLATE, HANDLE BRACE GUSSET
46	500005	4	5/16" X 1-1/2" BOLT W/ LOCK WASHER & NUT
47	500056	4	5/16" X 3/4" BOLT W/ FLAT WASHER, LOCK WASHER & NUT
48	400056	1	WEIGHT BAR
49	300009	1	WEIGHT STOP
50	500016	2	COTTER PIN, 5/32" X 1-1/4"

Engine Pulley Components

TA-19D TURF AERATOR

Top View Looking Down on the Front of the Aerator

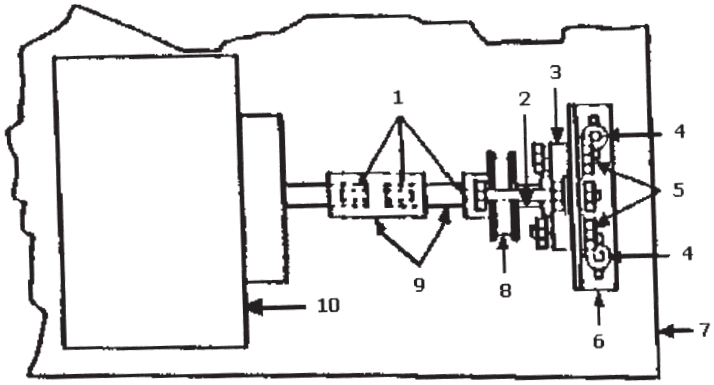

KEY	PART NO.	QTY/PER SHEET	DESCRIPTION
1	500011	6	KEY, 3/16" x 1" SQUARE
2	500098	3	3/8" x 3-1/2" BOLT w/ (2) FLATS, LOCK, & (2) NUTS
3	100081	1	BEARING, 3/4" 2-BOLT
4	500060	6	3/8" x 1" BOLT w/ FLAT, LOCK, & NUT
5	500099	2	3/8" x 1-1/4" BOLT w/ FLAT, LOCK, & NUT
6	300037	1	PLATE, ADJUSTER
7	400072	1	FRAME, MAIN
8	100038	1	PULLEY, 3/4" x 3"
9	200014	1	COUPLER w/ STUB SHAFT, 3/4"
10	100037	1	ENGINE, 4.0 HP HONDA

Front View of Water Drum & Mounting

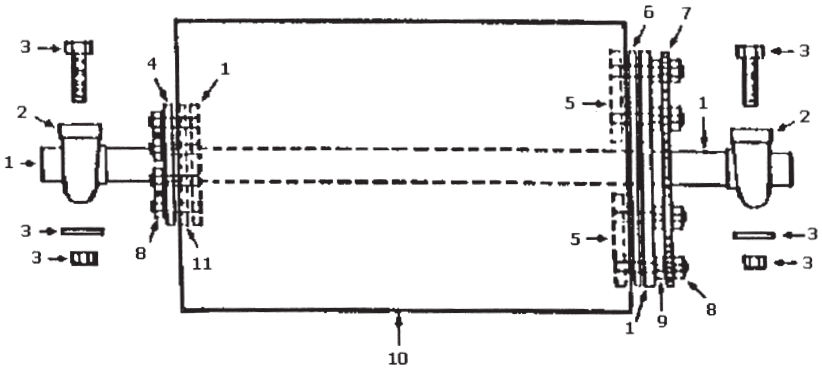

Water Drum Components

TA-19D TURF AERATOR

KEY	PART NO.	QTY/PER SHEET	DESCRIPTION
1	700009	1	AXLE, DRUM
2	100004	4	BEARING w/ ECCENTRIC COLLAR, 1" PILLOW BLOCK
3	500040	8	1/2" x 1-3/4" BOLT w/ FLAT WASHER & LOCK NUT
4	100083	1	WASHER, SMALL STEEL
5	700011	2	INNER HALF PLATE w/ STUDS
6	100084	1	GASKET, LARGE RUBBER
7	200015	1	SPROCKET, #40 x 30
8	500100	12	LOCK NUT, 5/16" TWO-WAY
9	500101	6	NUT, 5/16" STANDARD
10	100085	1	DRUM, WATER
11	100087	1	GASKET, SMALL RUBBER
12	100108	1	CHAIN, #40 x 139 PITCH (NOT SHOWN)
13	100109	1	PLUG, WATER DRUM (NOT SHOWN)

Drive Components

TA-19D TURF AERATOR

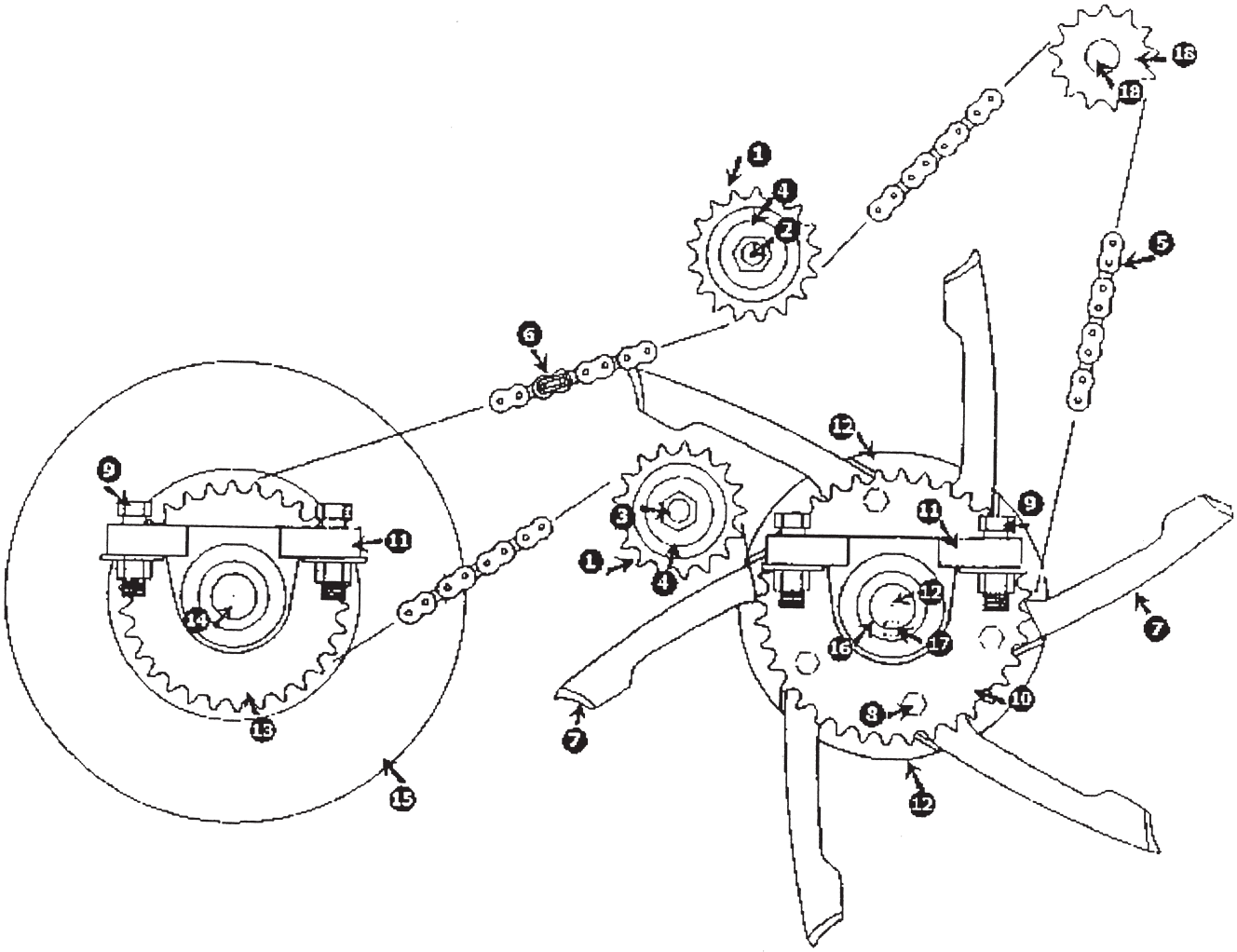

KEY	PART NO.	QTY/PER SHEET	DESCRIPTION
1	100043	2	IDLER SPROCKET, #40 x 17 x 1/2"
2	500037	1	1/2" x 1-3/4" BOLT w/ LOCK & NUT
3	500038	1	LOCK & NUT, 1/2"
4	500034	2	FLAT WASHERS, (2) 1/2"
5	100108	1	CHAIN, #40 x 139 PITCH
6	100025	1	CONNECTING LINK, #40
7	100032	30	TINE, PLUGGING
8	500128	60	5/16" x 1-1/2" BOLT w/ LOCK NUT
9	500040	8	1/2" x 1-3/4" BOLT w/ FLAT & LOCK NUT
10	200009	1	SPROCKET w/ 1" HUB, #40 x 36
11	100004	4	BEARING w/ ECCENTRIC COLLAR, 1" PILLOW BLOCK
12	700020	1	SHAFT ASSEMBLY, TINE DISC
13	200015	1	SPROCKET, #40 x 30
14	700009	1	AXLE, DRUM
15	100085	1	DRUM, WATER
16	300011	1	SPACER, 1" OUTSIDE DRUM SHAFT
17	500003	1	KEY, 1/4" x 7/8" HALF MOON
18	200006	1	JACK SHAFT ASSEMBLY, #40 x 13

TA-26D TURF AERATOR
(S.N. 000252 & UP)
PARTS LIST

Left Side View

(Shown without Pulley Guard)

TA-26D TURF AERATOR

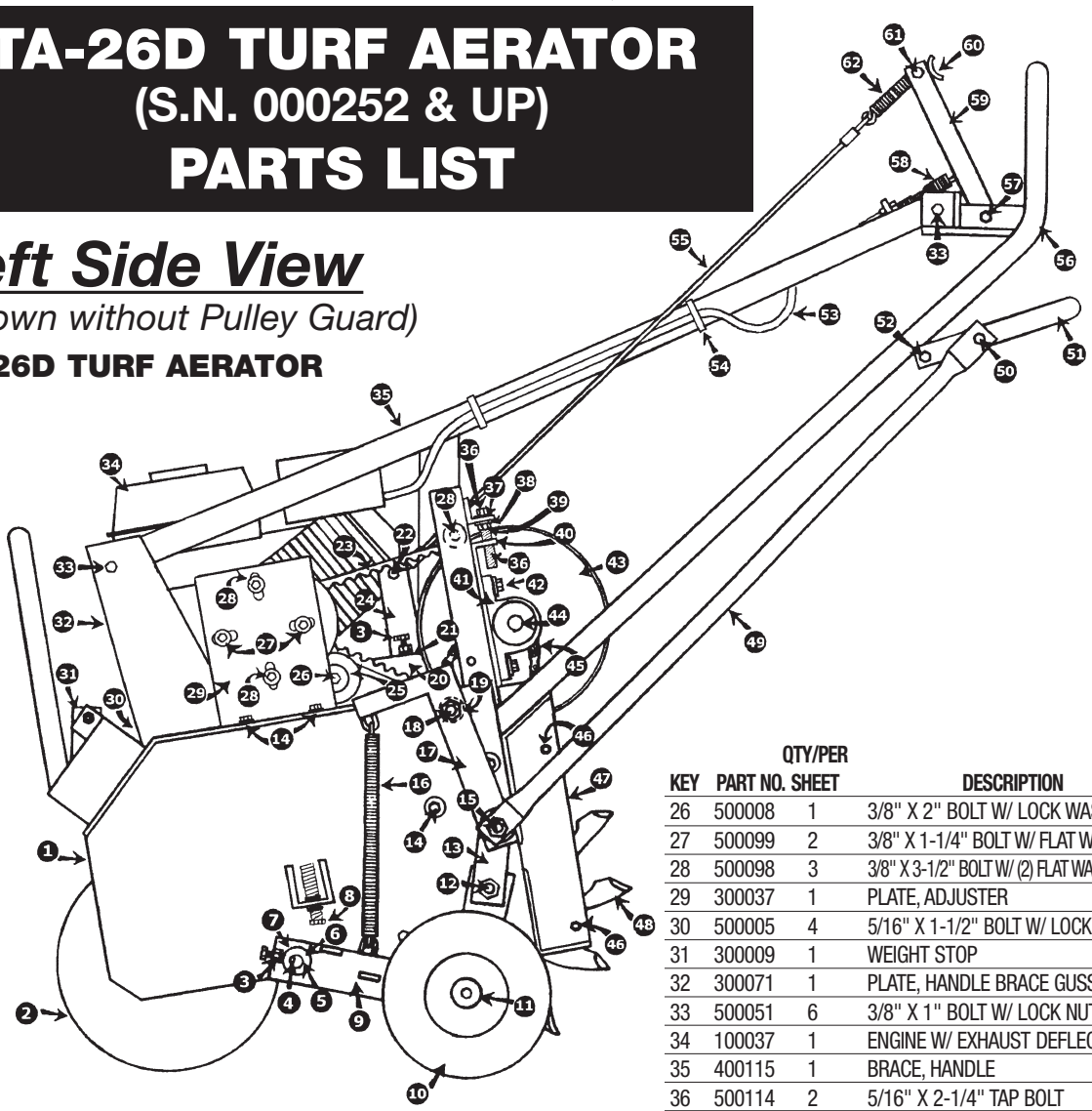

KEY	PART NO.	QTY/PER SHEET	DESCRIPTION
1	400073	1	FRAME, MAIN
2	100086	1	DRUM, WATER
3	500015	3	1/4" X 3/4" BOLT W/ LOCK WASHER & NUT
4	500011	6	KEY, 3/16" X 1" SQUARE
5	200012	1	SHAFT, KEYED
6	500054	2	WASHER, (3) 3/4" FLAT
7	500109	2	1/4"-28 X 5/8" BOLT W/ FENDER WASHER & LOCK WASHER
8	500044	2	1/2" X 1-3/4" BOLT W/ LOCK WASHER & (2) NUTS
9	400025	1	ARM, L.H. REAR AXLE SUPPORT
10	100031	2	TIRE ASSEMBLY, 8" REAR
11	100049	2	PIN W/ CLIP, REAR AXLE
12	500131	4	NUT, 1/2" LOCK
13	300006	2	FLAT, PIVOT
14	500060	6	3/8" X 1" BOLT W/ FLAT WASHER, LOCK WASHER & NUT
15	500046	2	1/2" X 2" BOLT W/ (3) FLAT WASHERS & (2) LOCK NUTS
16	100040	2	SPRING, FRAME
17	400015	2	ARM, SPRING
18	500047	2	1/2" X 2-1/2" BOLT W/ (2) LOCK NUTS
19	300055	2	SPACER W/ (2) FLAT WASHERS, & BUSHING
20	400021	1	ARM, IDLER
21	500001	1	GREASE FITTING, 1/4" X 28
22	500107	1	3/8" X 1" BOLT W/ (2) FLAT WASHERS & LOCK NUT
23	100039	1	V-BELT, BX43
24	400020	1	ARM, CLUTCH
25	100010	1	PULLEY, IDLER
26	500008	1	3/8" X 2" BOLT W/ LOCK WASHER & NUT
27	500099	2	3/8" X 1-1/4" BOLT W/ FLAT WASHER, LOCK WASHER & NUT
28	500098	3	3/8" X 3-1/2" BOLT W/ (2) FLAT WASHERS, LOCK WASHER & (2) NUTS
29	300037	1	PLATE, ADJUSTER
30	500005	4	5/16" X 1-1/2" BOLT W/ LOCK WASHER & NUT (NOT SHOWN)
31	300009	1	WEIGHT STOP
32	300071	1	PLATE, HANDLE BRACE GUSSET
33	500051	6	3/8" X 1" BOLT W/ LOCK NUT
34	100037	1	ENGINE W/ EXHAUST DEFLECTOR, 4HP HONDA
35	400115	1	BRACE, HANDLE
36	500114	2	5/16" X 2-1/4" TAP BOLT
37	500083	2	WASHER, 5/16" FLAT
38	500115	2	WASHER, 5/16" LOCK
39	500101	2	NUT, 5/16"
40	300049	2	PLATE, CHAIN TIGHTENING
41	100013	2	BEARING W/ COLLAR, 3/4" PILLOW BLOCK
42	500010	4	5/16" X 1-3/4" BOLT W/ (2) FLAT WASHERS, LOCK WASHER & NUT
43	100041	1	9" PULLEY W/ 3/4" HUB & 3/16" SQ. KEY
44	200011	1	JACK SHAFT W/ #40 X 13 SPROCKET & HUB
45	100108	1	CHAIN, #40 X 139 PITCH
46	500124	2	5/16" X 3/4" CARRIAGE BOLT W/ LOCK NUT
47	400071	1	GUARD, CHAIN
48	100032	42	TINE, PLUGGING
49	300007	2	ARM, LINKAGE
50	500049	2	3/8" X 1-1/4" BOLT W/ FLAT WASHER & (2) LOCK NUTS
51	400027	1	HANDLE, LOWERING
52	500048	2	3/8" X 3-1/2" BOLT W/ (2) LOCK NUTS
53	100036	1	CABLE W/ CONNECTING ENDS, THROTTLE
54	100020	2	TIE, PLASTIC
55	200008	1	CABLE, CLUTCH
56	400028	1	HANDLE, MAIN
57	500050	2	3/8" X 1-1/4" BOLT W/ (2) LOCK NUTS
58	100035	1	SPRING, THROTTLE CABLE CONNECTING
59	400053	1	HANDLE, CONTROL
60	100033	2	GRIP 1/8" X 1"
61	500055	1	3/8" X 1-1/4" BOLT W/ LOCK WASHER, LOCK NUT & NUT
62	100034	1	SPRING, CLUTCH CABLE

Right Side View

TA-26D TURF AERATOR

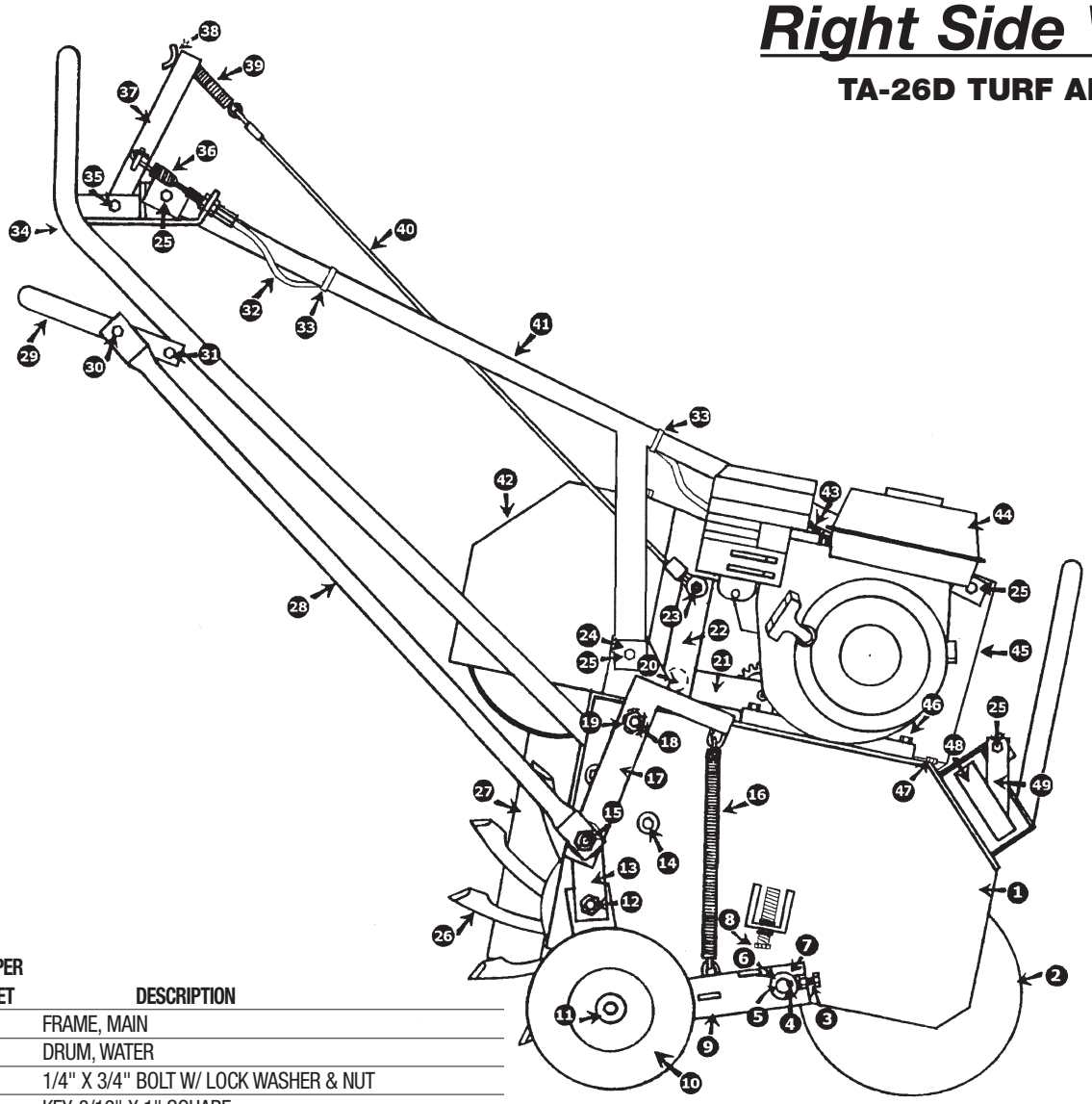

KEY	PART NO.	QTY/PER SHEET	DESCRIPTION
1	400073	1	FRAME, MAIN
2	100086	1	DRUM, WATER
3	500015	3	1/4" X 3/4" BOLT W/ LOCK WASHER & NUT
4	500011	6	KEY, 3/16" X 1" SQUARE
5	200012	1	SHAFT, KEYED
6	500054	2	WASHER, (3) 3/4" FLAT
7	500109	2	1/4"-28 X 5/8" BOLT W/ FENDER WASHER & LOCK WASHER
8	500044	2	1/2" X 1-3/4" BOLT W/ LOCK WASHER & 2 NUTS
9	400026	1	ARM, R.H. REAR AXLE SUPPORT
10	100031	2	TIRE ASSEMBLY, 8" REAR
11	100049	2	PIN W/ CLIP, REAR AXLE
12	500131	4	NUT, 1/2" LOCK
13	300006	2	FLAT, PIVOT
14	500060	6	3/8" X 1" BOLT W/ FLAT WASHER, LOCK WASHER & NUT
15	500046	2	1/2" X 2" BOLT W/ (3) FLAT WASHERS & (2) LOCK NUTS
16	100040	2	SPRING, FRAME
17	400015	2	ARM, SPRING
18	500047	2	1/2" X 2-1/2" BOLT W/ (2) LOCK NUTS
19	300055	2	SPACER W/ (2) FLAT WASHERS & BUSHING
20	100021	2	BUSHING, BRASS
21	400021	1	ARM, IDLER
22	400020	1	ARM, CLUTCH
23	500107	1	3/8" X 1" BOLT W/ 2 FLAT WASHERS & LOCK NUT
24	500042	1	WASHER, 3/8" FLAT
25	500051	6	3/8" X 1 BOLT W/ LOCK NUT
26	100032	42	TINE, PLUGGING
27	400071	1	GUARD, CHAIN
28	300007	2	ARM, LINKAGE
29	400027	1	HANDLE, LOWERING
30	500049	2	3/8" X 1-1/4" BOLT W/ FLAT WASHER & (2) LOCK NUTS

KEY	PART NO.	QTY/PER SHEET	DESCRIPTION
31	500048	2	3/8" X 3-1/2" BOLT W/ (2) LOCK NUTS
32	100036	1	CABLE W/ CONNECTING ENDS, THROTTLE
33	100020	2	TIE, PLASTIC
34	400028	1	HANDLE, MAIN
35	500050	2	3/8" X 1-1/4" BOLT W/ (2) LOCK NUTS
36	100035	1	SPRING, THROTTLE CABLE CONNECTING
37	400053	1	HANDLE, CONTROL
38	100033	2	GRIP, 1/8" X 1"
39	100034	1	SPRING, CLUTCH CABLE
40	200008	1	CABLE, CLUTCH
41	400115	1	BRACE, HANDLE
42	400029	1	PULLEY GUARD W/ (3) 5/16" X 3/4" BOLTS, (3) FLAT WASHERS, (3) LOCK WASHERS & NUT
43	100027	1	SPRING, THROTTLE
44	100037	1	ENGINE W/ EXHAUST DEFLECTOR, 4HP HONDA
45	300071	1	PLATE, HANDLE BRACE GUSSET
46	500005	4	5/16" X 1-1/2" BOLT W/ LOCK WASHER & NUT
47	500056	4	5/16" X 3/4" BOLT W/ FLAT WASHER, LOCK WASHER & NUT
48	400057	1	WEIGHT BAR
49	300009	1	WEIGHT STOP

Engine Pulley Components

TA-26D TURF AERATOR

Top View Looking Down on the Front of the Aerator

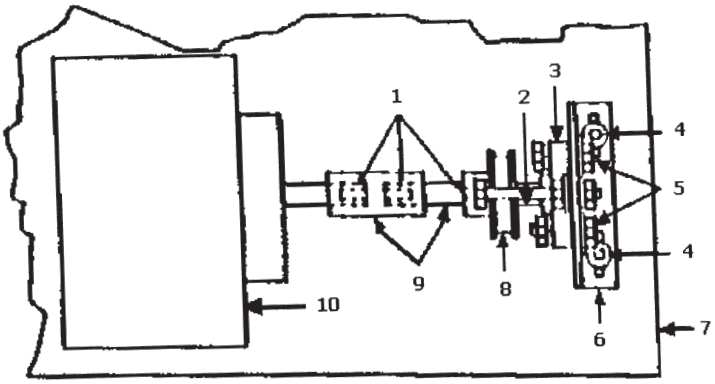

KEY	PART NO.	QTY/PER SHEET	DESCRIPTION
1	500011	6	KEY, 3/16" x 1" SQUARE
2	500098	3	3/8" x 3-1/2" BOLT w/ (2) FLATS, LOCK, & (2) NUTS
3	100081	1	BEARING, 3/4" 2-BOLT
4	500060	6	3/8" x 1" BOLT w/ FLAT, LOCK, & NUT
5	500099	2	3/8" x 1-1/4" BOLT w/ FLAT, LOCK, & NUT
6	300037	1	PLATE, ADJUSTER
7	400073	1	FRAME, MAIN
8	100038	1	PULLEY, 3/4" x 3"
9	200013	1	COUPLER w/ STUB SHAFT, 3/4"
10	100037	1	ENGINE, 4.0 HP HONDA

Front View of Water Drum & Mounting

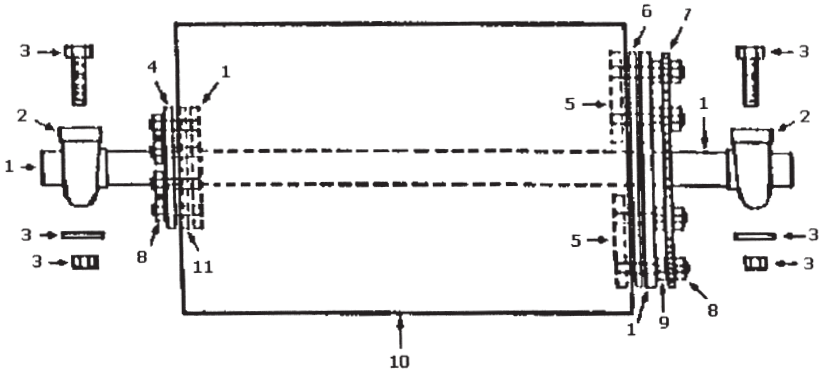

Water Drum Components

TA-26D TURF AERATOR

KEY	PART NO.	QTY/PER SHEET	DESCRIPTION
1	700010	1	AXLE, DRUM
2	100004	4	BEARING w/ ECCENTRIC COLLAR, 1" PILLOW BLOCK
3	500040	8	1/2" x 1-3/4" BOLT w/ FLAT WASHER & LOCK NUT
4	100083	1	WASHER, SMALL STEEL
5	700011	2	INNER HALF PLATE w/ STUDS
6	100084	1	GASKET, LARGE RUBBER
7	200015	1	SPROCKET, #40 x 30
8	500100	12	LOCK NUT, 5/16" TWO-WAY
9	500101	6	NUT, 5/16" STANDARD
10	100086	1	DRUM, WATER
11	100087	1	GASKET, SMALL RUBBER
12	100108	1	CHAIN, #40 x 139 PITCH (NOT SHOWN)
13	100109	1	PLUG, WATER DRUM (NOT SHOWN)

Drive Components

TA-26D TURF AERATOR

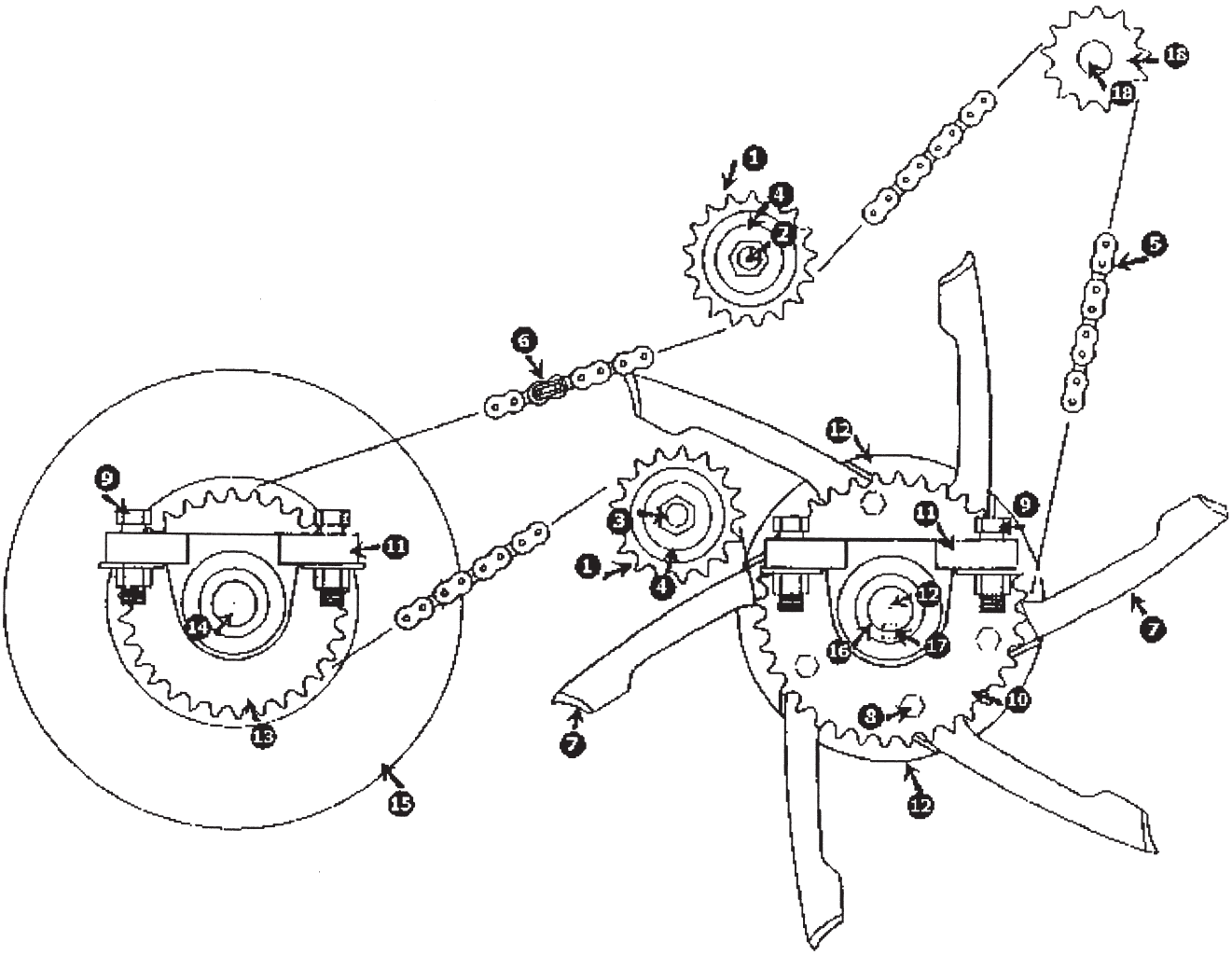

KEY	PART NO.	QTY/PER SHEET	DESCRIPTION
1	100043	2	IDLER SPROCKET, #40 x 17 x 1/2"
2	500037	1	1/2" x 1-3/4" BOLT w/ LOCK & NUT
3	500038	1	LOCK & NUT, 1/2"
4	500034	2	FLAT WASHERS, (2) 1/2"
5	100108	1	CHAIN, #40 x 139 PITCH
6	100025	1	CONNECTING LINK, #40
7	100032	42	TINE, PLUGGING
8	500128	84	5/16" x 1-1/2" BOLT w/ LOCK NUT
9	500040	8	1/2" x 1-3/4" BOLT w/ FLAT & LOCK NUT
10	200009	1	SPROCKET w/ 1" HUB, #40 x 36
11	100004	4	BEARING w/ ECCENTRIC COLLAR, 1" PILLOW BLOCK
12	700019	1	SHAFT ASSEMBLY, TINE DISC
13	200015	1	SPROCKET, #40 x 30
14	700010	1	AXLE, DRUM
15	100086	1	DRUM, WATER
16	300011	1	SPACER, 1" OUTSIDE DRUM SHAFT
17	500003	1	KEY, 1/4" x 7/8" HALF MOON
18	200011	1	JACK SHAFT ASSEMBLY, #40 x 13

48-RT TOW AERATOR
(S.N. 000337 & UP)
PARTS LIST

Parts Main Frame

48-RT TOW AERATOR

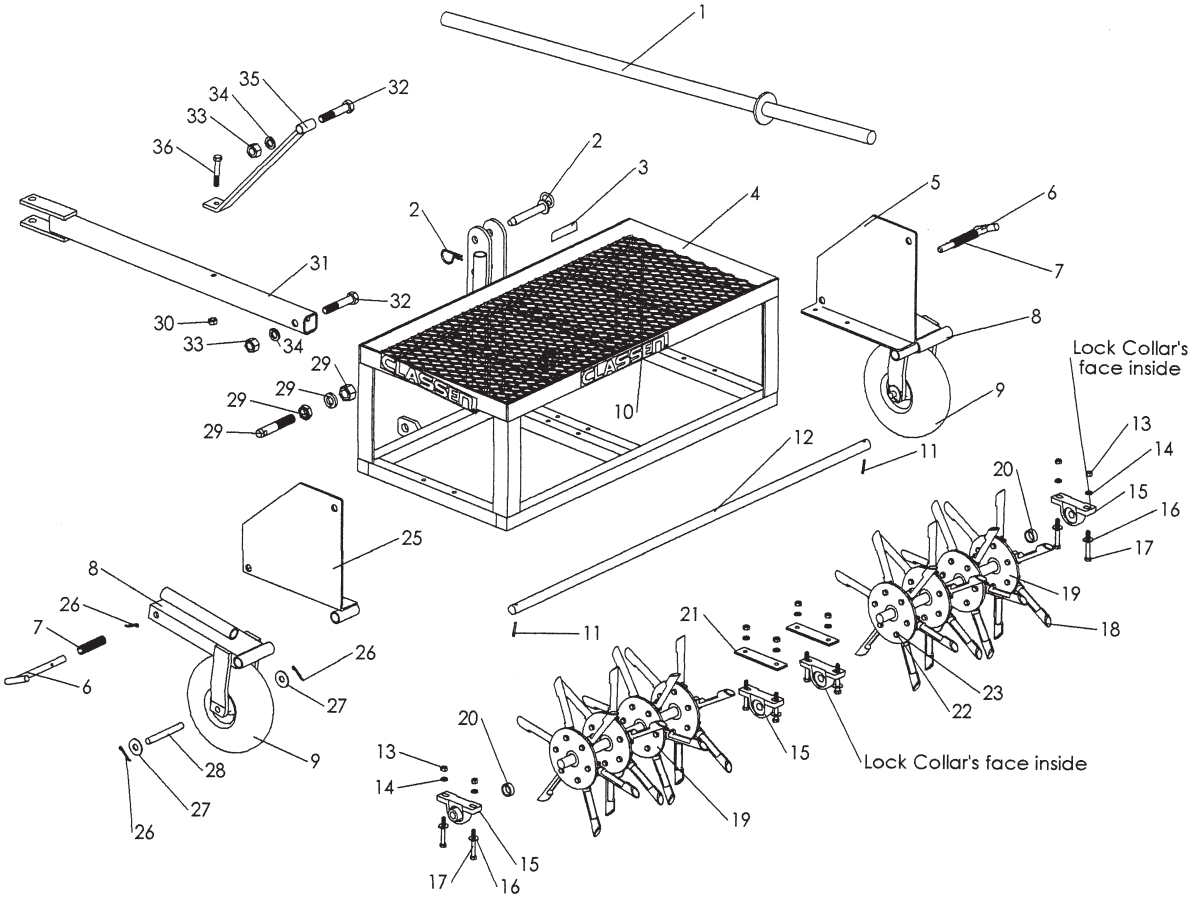

KEY	PART NO.	QTY/PER SHEET	DESCRIPTION
1	400060	1	LIFT ROD
2	100099	1	3/4" x 4-1/2" HITCH PIN w/CLIP
3	100069	1	DECAL, "DANGER"
4	400153	1	MAIN FRAME
5	400062	1	R.H SIDE PLATE
6	400063	2	LATCH PIN
7	100100	2	SPRING
8	400064	2	WHEEL FORK
9	100103	2	TIRE & WHEEL ASSEMBLY
10	100074	3	DECAL, "CLASSEN"
11	500182	2	3/16" X 1-1/2" COTTER PIN
12	300044	1	WHEEL FORK AXLE
13	500129	8	3/8" NUT
14	500130	8	3/8" LOCK WASHER
15	100101	4	1" PILLOW BLOCK BEARING
16	500042	8	3/8" FLAT WASHER
17	500159	8	3/8" x 3" BOLT
18	100032	48	TINE

KEY	PART NO.	QTY/PER SHEET	DESCRIPTION
19	700026	2	TINE SHAFT
20	300106	2	TINE END SPACER
21	300058	2	CENTER BEARING SPACER
22	500211	48	5/16" x 1-3/4" GR. 8 BOLT
23	500169	48	5/16" LOCK NUT
24	100055	1	DECAL, "SERIAL NUMBER" (not shown)
25	400065	1	L.H. SIDE PLATE
26	500016	4	5/32" x 1-1/4" COTTER PIN
27	500053	4	5/8" FLAT WASHER
28	300045	2	WHEEL AXLE
29	100104	2	7/8" LIFT ARM PIN w/ LOCK WASHERS & NUTS
30	500311	1	1/2" LOCK NUT
31	400058	1	HITCH
32	500213	2	3/4" X 4" BOLT
33	500214	2	3/4" NUT
34	500195	2	3/4" LOCK WASHER
35	400059	1	HITCH GUSSET
36	500215	1	1/2" x 3" BOLT

60-RT TOW AERATOR
(S.N. 000161 & UP)
PARTS LIST

Parts Main Frame

60-RT TOW AERATOR

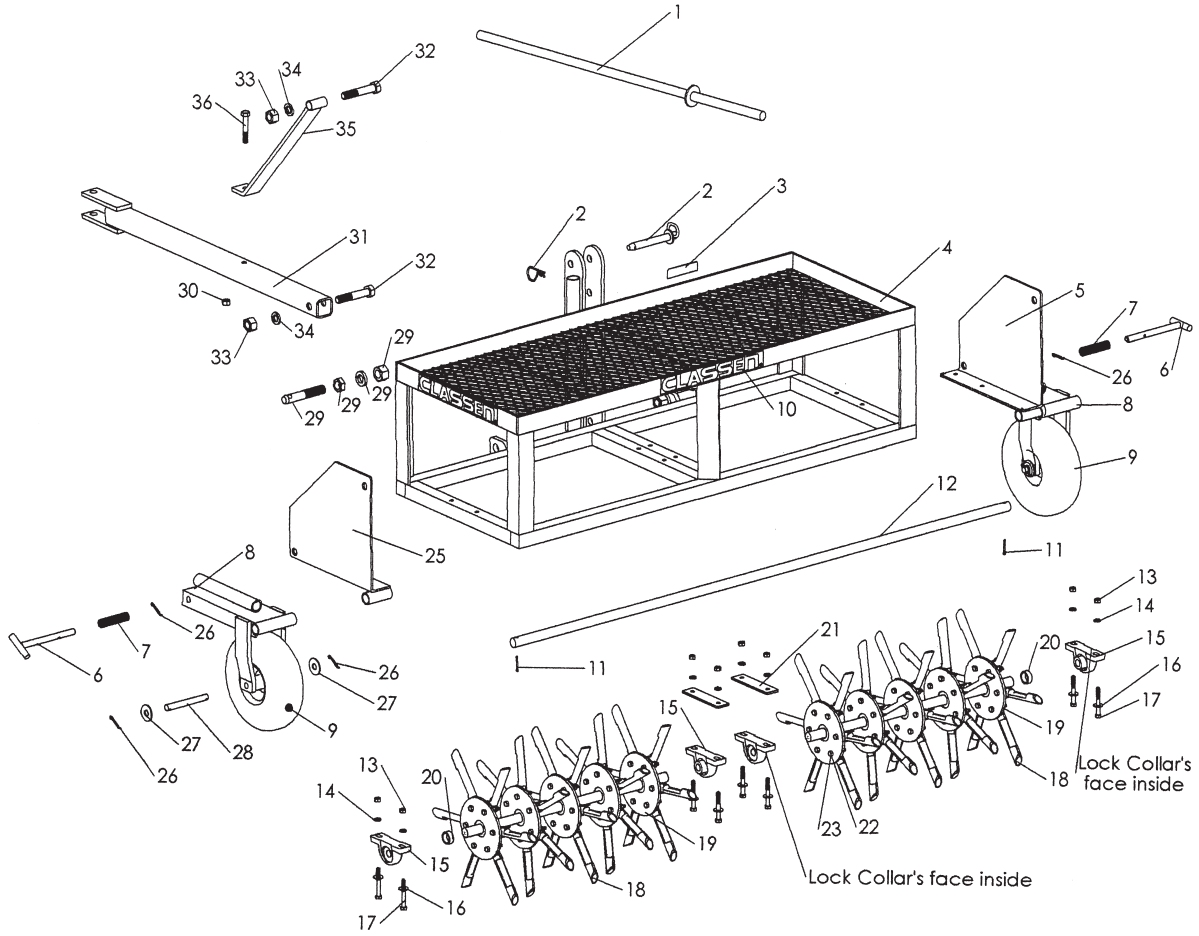

KEY	PART NO.	QTY/PER SHEET	DESCRIPTION
1	400060	1	LIFT ROD
2	100099	1	3/4" x 4-1/2" HITCH PIN
3	100069	1	DECAL, "DANGER"
4	400157	1	MAIN FRAME
5	400062	1	R.H SIDE PLATE
6	400063	2	LATCH PIN
7	100100	2	SPRING
8	400064	2	WHEEL FORK
9	100103	2	TIRE & WHEEL ASSEMBLY
10	100074	3	DECAL, "CLASSEN"
11	500182	2	3/16" X 1-1/2" COTTER PIN
12	300051	1	WHEEL FORK AXLE
13	500129	8	3/8" NUT
14	500130	8	3/8" LOCK WASHER
15	100101	4	1" PILLOW BLOCK BEARING
16	500042	8	3/8" FLAT WASHER
17	500159	8	3/8" x 3" BOLT
18	100032	60	TINE

KEY	PART NO.	QTY/PER SHEET	DESCRIPTION
19	700027	2	TINE SHAFT
20	300106	2	TINE END SPACER
21	300058	2	CENTER BEARING SPACER
22	500211	48	5/16" x 1-3/4" GR. 8 BOLT
23	500169	48	5/16" LOCK NUT
24	100055	1	DECAL, "SERIAL NUMBER" (not shown)
25	400065	1	L.H. SIDE PLATE
26	500016	4	5/32" x 1-1/4" COTTER PIN
27	500053	4	5/8" FLAT WASHER
28	300045	2	WHEEL AXLE
29	100104	2	7/8" LIFT ARM PIN w/ LOCK WASHERS & NUTS
30	500311	1	1/2" LOCK NUT
31	400058	1	HITCH
32	500213	2	3/4" X 4" BOLT
33	500214	2	3/4" NUT
34	500195	2	3/4" LOCK WASHER
35	400059	1	HITCH GUSSET
36	500215	1	1/2" x 3" BOLT

72-RT TOW AERATOR
(S.N. 144 & UP)
PARTS LIST

Parts Main Frame

72-RT TOW AERATOR

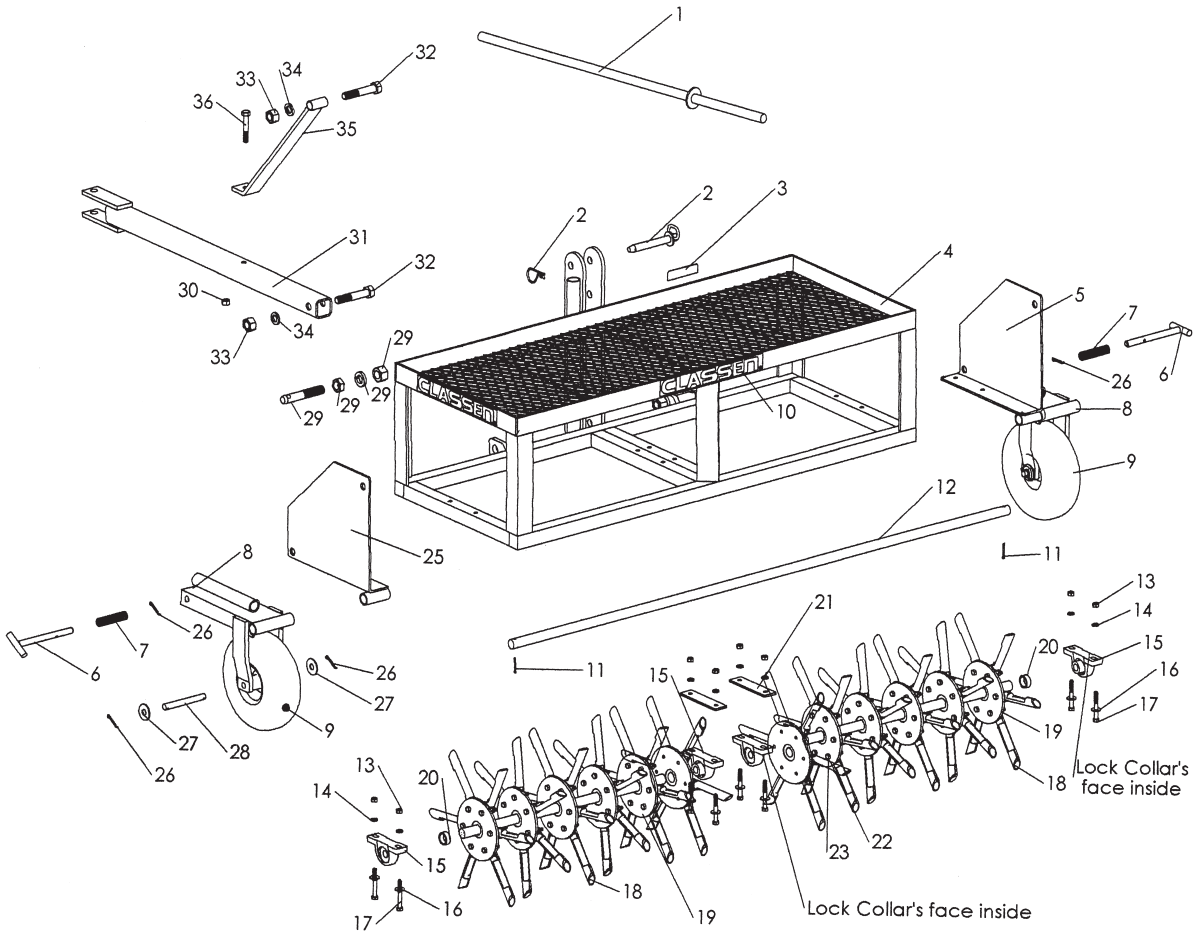

KEY	PART NO.	QTY/PER SHEET	DESCRIPTION
1	400060	1	LIFT ROD
2	100099	1	3/4" x 4-1/2" HITCH PIN
3	100069	1	DECAL, "DANGER"
4	400159	1	MAIN FRAME
5	400062	1	R.H SIDE PLATE
6	400063	2	LATCH PIN
7	100100	2	SPRING
8	400064	2	WHEEL FORK
9	100103	2	TIRE & WHEEL ASSEMBLY
10	100074	3	DECAL, "CLASSEN"
11	500182	2	3/16" X 1-1/2" COTTER PIN
12	300052	1	WHEEL FORK AXLE
13	500129	8	3/8" NUT
14	500130	8	3/8" LOCK WASHER
15	100101	4	1" PILLOW BLOCK BEARING
16	500042	8	3/8" FLAT WASHER
17	500159	8	3/8" x 3" BOLT
18	100032	72	TINE

KEY	PART NO.	QTY/PER SHEET	DESCRIPTION
19	700029	2	TINE SHAFT
20	300106	2	TINE END SPACER
21	300058	2	CENTER BEARING SPACER
22	500211	48	5/16" x 1-3/4" GR. 8 BOLT
23	500169	48	5/16" LOCK NUT
24	100055	1	DECAL, "SERIAL NUMBER" (not shown)
25	400065	1	L.H. SIDE PLATE
26	500016	4	5/32" x 1-1/4" COTTER PIN
27	500053	4	5/8" FLAT WASHER
28	300045	2	WHEEL AXLE
29	100104	2	7/8" LIFT ARM PIN w/ LOCK WASHER & NUTS
30	500311	1	1/2" LOCK NUT
31	400058	1	HITCH
32	500213	2	3/4" X 4" BOLT
33	500214	2	3/4" NUT
34	500195	2	3/4" LOCK WASHER
35	400059	1	HITCH GUSSET
36	500215	1	1/2" x 3" BOLT

CLASSEN®

1028 Street Road • P.O. Box 38
Southampton, PA 18966 U.S.A.

TWO YEAR LIMITED WARRANTY
Effective April 1, 2007

For the period of two years from the date of purchase, CLASSEN MFG., INC. will repair or replace for the original purchaser free of charge, any part or parts found upon the examination of our factory authorized service station, or by the factory in Norfolk, Nebraska, to be defective in material or workmanship. All transportation charges on parts submitted for repair or replacement under this warranty shall be borne by the purchaser.

This warranty does not include engines or engine parts, tires, batteries, or gearboxes that are covered under separate warranties furnished by their manufacturer or supplier, nor does it include normal maintenance parts, including but not limited to, spark plugs, points, filters, blades, and lubricants.

All service under this warranty will be furnished or performed by our factory authorized service stations.

There is no other expressed warranty. Implied warranties, including those of merchantability and fitness for a particular purpose, are limited to two years from the date of purchase and to the extent permitted by law, any and all implied warranties are excluded. The above remedy of repair and replacement of defective parts is the purchaser's exclusive remedy for any defect, malfunction or breach of warranty. Liability for incidental or consequential damages under any and all warranties is excluded to the extent permitted by law.

NORMAL RESPONSIBILITIES OF THE SELLER AND THE USER

1. The Distributor or Dealer is responsible for the proper assembly and preparation of the product for delivery to the end user.
2. The User is responsible for reading the Manual and Instructions.
3. The User is responsible for proper operation and maintenance as described in the manual.
4. The User is responsible for the replacement of wear items such as blades, belts, tires, batteries, etc.
5. The User is responsible for damage due to improper operation and maintenance, as well as abuse.

All claims must be received by the factory 30 days after the end of the warranty period to receive warranty consideration.

See the complete line of Turf Care Products from *CLASSEN*

COMPACT AERATORS
CA-18H
CA-18B

SPLIT DRIVE AERATORS
TA-25D
TA-17D

TURF AERATORS
TA-19D
TA-26D

TOW/3PT AERATORS
48RT
60RT
72RT

3 PT AERATORS
48R
60R
72R
84R

SOD CUTTERS
SC-12
SC-18
SC-20

TURF RAKES
TR-20H
TR-20B
TRC-20H
TRC-20B

TURF SEEDERS
TS-20H
TS-20B

DRILL SEEDER
DS-20

TRAILERS
AST
SAT

Classen reserves the right to make changes or add improvements to its products at any time without incurring any obligation to make such changes to products manufactured previously. Classen, or its distributors and dealers, accept no responsibility for variations which may be evident in the actual specifications of its products and the statements and descriptions contained in this publication.

CLASSEN®

1028 Street Road • P.O. Box 38
Southampton, PA 18966 U.S.A.