OPERATION MANUAL

MULTIQUIP®

MODEL QP2TH
TRASH PUMP
(HONDA GX160K1QX2/GX160U1QX2/GX160UT2QX2 GASOLINE ENGINE)

Revision #8 (5/29/20)

To find the latest revision of this publication or associated parts manual, visit our website at:
www.multiquip.com

THIS MANUAL MUST ACCOMPANY THE EQUIPMENT AT ALL TIMES.

WARNING
CANCER &
REPRODUCTIVE HARM
www.P65Warnings.ca.gov
P/N 38707

QP2TH Trash Pump

Proposition 65 Warning 2
Safety Information 4-8
Specifications (Pump)..... 9
Specifications (Engine)..... 10
General Information..... 11
Pump Components..... 12-13
Basic Engine..... 14
Inspection (Engine)..... 15
Setup 16
Operation..... 17-18
Maintenance (Pump) 19-20
Maintenance (Engine) 21-23
Storage 24
Troubleshooting (Engine)..... 25
Troubleshooting (Engine/Pump) 26

NOTICE

Specifications and part numbers are subject to change without notice.

Do not operate or service the equipment before reading the entire manual. Safety precautions should be followed at all times when operating this equipment. Failure to read and understand the safety messages and operating instructions could result in injury to yourself and others.

SAFETY MESSAGES

The four safety messages shown below will inform you about potential hazards that could injure you or others. The safety messages specifically address the level of exposure to the operator and are preceded by one of four words: **DANGER, WARNING, CAUTION** or **NOTICE.**

SAFETY SYMBOLS

DANGER

Indicates a hazardous situation which, if not avoided, **WILL** result in **DEATH** or **SERIOUS INJURY.**

WARNING

Indicates a hazardous situation which, if not avoided, **COULD** result in **DEATH** or **SERIOUS INJURY.**

CAUTION

Indicates a hazardous situation which, if not avoided, **COULD** result in **MINOR** or **MODERATE INJURY.**

NOTICE

Addresses practices not related to personal injury.

Potential hazards associated with the operation of this equipment will be referenced with hazard symbols which may appear throughout this manual in conjunction with safety messages.

Symbol	Safety Hazard
	Lethal exhaust gas hazards
	Explosion hazards
	Burn hazards
	Pressurized fluid hazards
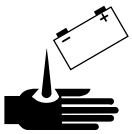	Battery acid hazards
	Eye safety hazards

GENERAL SAFETY

CAUTION

- **NEVER** operate this equipment without proper protective clothing, shatterproof glasses, respiratory protection, hearing protection, steel-toed boots and other protective devices required by the job or city and state regulations.

- **NEVER** operate this equipment when not feeling well due to fatigue, illness or when under medication.

- **NEVER** operate this equipment under the influence of drugs or alcohol.

NOTICE

- This equipment should only be operated by trained and qualified personnel 18 years of age and older.
- Whenever necessary, replace nameplate, operation and safety decals when they become difficult read.
- Manufacturer does not assume responsibility for any accident due to equipment modifications. Unauthorized equipment modification will void all warranties.
- **NEVER** use accessories or attachments that are not recommended by Multiquip for this equipment. Damage to the equipment and/or injury to user may result.
- **ALWAYS** know the location of the nearest **fire extinguisher.**

- **ALWAYS** know the location of the nearest **first aid kit.**

- **ALWAYS** know the location of the nearest phone or **keep a phone on the job site.** Also, know the phone numbers of the nearest **ambulance, doctor** and **fire department.** This information will be invaluable in the case of an emergency.

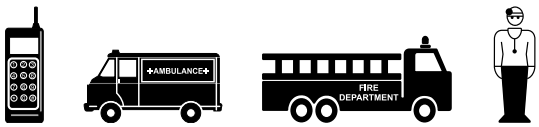

PUMP SAFETY

DANGER

- **NEVER** pump volatile, explosive, flammable or low flash point fluids. These fluids could ignite or explode.
- The engine fuel exhaust gases contain poisonous carbon monoxide. This gas is colorless and odorless, and can cause death if inhaled.
- The engine of this equipment requires an adequate free flow of cooling air. **NEVER** operate this equipment in any enclosed or narrow area where free flow of the air is restricted. If the air flow is restricted it will cause injury to people and property and serious damage to the equipment or engine.

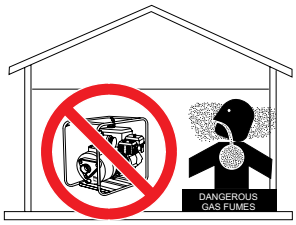

- **NEVER** operate the equipment in an explosive atmosphere or near combustible materials. An explosion or fire could result causing severe **bodily harm or even death.**

WARNING

- **NEVER** pump corrosive chemicals or water containing toxic substances. These fluids could create serious health and environmental hazards. Contact local authorities for assistance.
- **NEVER** open the priming plug when pump is hot. Hot water inside could be pressurized much like the radiator of an automobile. Allow pump to cool to the touch before loosening plug. The possibility exists of scalding, resulting in severe bodily harm.

- **NEVER** disconnect any **emergency or safety devices.** These devices are intended for operator safety. Disconnection of these devices can cause severe injury, bodily harm or even death. Disconnection of any of these devices will void all warranties.

⚠ CAUTION

- **NEVER** lubricate components or attempt service on a running machine.
- **NEVER** block or restrict flow from discharge hose. Remove kinks from discharge line before starting pump. Operation with a blocked discharge line can cause water inside pump to overheat.

NOTICE

- **ALWAYS** fill the pump casing with water before starting the engine. Failure to maintain water inside the pump housing will cause severe damage to the pump and mechanical seal.
- In winter drain water from pump housing to prevent freezing.
- **NEVER** start the pump with the clean-out cover removed. The rotating impeller inside the pump can cut or sever objects caught in it. Before starting the pump, check that the clean-out cover is securely fastened.
- **ALWAYS** keep the machine in proper running condition.
- **ALWAYS** ensure pump is on level ground before use.
- Fix damage to machine and replace any broken parts immediately.
- **ALWAYS** store equipment properly when it is not being used. Equipment should be stored in a clean, dry location out of the reach of children and unauthorized personnel.

ENGINE SAFETY

⚠ WARNING

- **NEVER** operate the engine with heat shields or guards removed.
- **DO NOT** remove the engine oil drain plug while the engine is hot. Hot oil will gush out of the oil tank and severely scald any persons in the general area of the pump.

⚠ CAUTION

- **NEVER** touch the hot exhaust manifold, muffler or cylinder. Allow these parts to cool before servicing equipment.

NOTICE

- **NEVER** run engine without an air filter or with a dirty air filter. Severe engine damage may occur. Service air filter frequently to prevent engine malfunction.
- **NEVER** tamper with the factory settings of the engine or engine governor. Damage to the engine or equipment can result if operating in speed ranges above the maximum allowable.

FUEL SAFETY

DANGER

- DO NOT add fuel to equipment if it is placed inside truck bed with plastic liner. Possibility exists of explosion or fire due to static electricity.

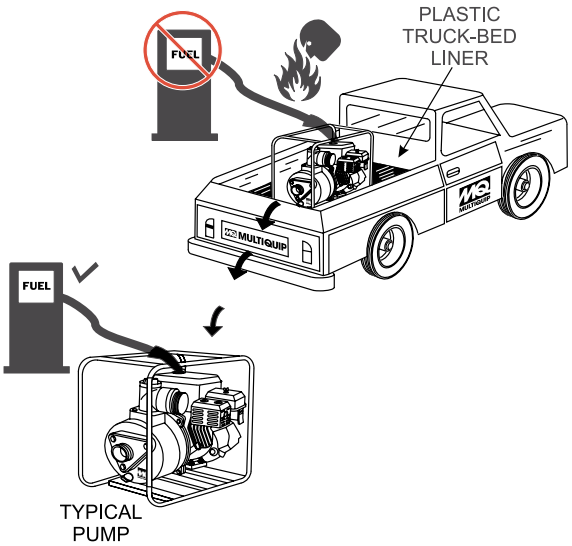

- **DO NOT** start the engine near spilled fuel or combustible fluids. Fuel is extremely flammable and its vapors can cause an explosion if ignited.
- **ALWAYS** refuel in a well-ventilated area, away from sparks and open flames.
- **ALWAYS** use extreme caution when working with **flammable** liquids.
- **DO NOT** fill the fuel tank while the engine is running or hot.
- **DO NOT** overfill tank, since spilled fuel could ignite if it comes into contact with hot engine parts or sparks from the ignition system.
- Store fuel in appropriate containers, in well-ventilated areas and away from sparks and flames.
- **NEVER** use fuel as a cleaning agent.
- **DO NOT** smoke around or near the equipment. Fire or explosion could result from fuel vapors or if fuel is spilled on a hot engine.

BATTERY SAFETY (ELECTRIC START ONLY)

DANGER

- **DO NOT** drop the battery. There is a possibility that the battery will explode.
- **DO NOT** expose the battery to open flames, sparks, cigarettes, etc. The battery contains combustible gases and liquids. If these gases and liquids come into contact with a flame or spark, an explosion could occur.

WARNING

- **ALWAYS** wear safety glasses when handling the battery to avoid eye irritation. The battery contains acids that can cause injury to the eyes and skin.

- Use well-insulated gloves when picking up the battery.
- **ALWAYS** keep the battery charged. If the battery is not charged, combustible gas will build up.
- **DO NOT** charge battery if frozen. Battery can explode. When frozen, warm the battery to at least 61°F (16°C).
- **ALWAYS** recharge the battery in a well-ventilated environment to avoid the risk of a dangerous concentration of combustible gases.
- If the battery liquid (dilute sulfuric acid) comes into contact with **clothing or skin**, rinse skin or clothing immediately with plenty of water.

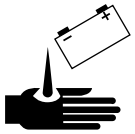

- If the battery liquid (dilute sulfuric acid) comes into contact with **eyes**, rinse eyes immediately with plenty of water and contact the nearest doctor or hospital to seek medical attention.

CAUTION

- **ALWAYS** disconnect the **NEGATIVE battery terminal** before performing service on the equipment.
- **ALWAYS** keep battery cables in good working condition. Repair or replace all worn cables.

TRANSPORTING SAFETY

CAUTION

- **NEVER** allow any person or animal to stand underneath the equipment while lifting.

NOTICE

- Before lifting, make sure that the equipment parts (hook and vibration insulator) are not damaged and screws are not loose or missing.
- Always make sure crane or lifting device has been properly secured to the lifting bail (hook) of the equipment.
- **ALWAYS** shutdown engine before transporting.
- **NEVER** lift the equipment while the engine is running.
- Tighten fuel tank cap securely and close fuel cock to prevent fuel from spilling.
- Use adequate lifting cable (wire or rope) of sufficient strength.
- Use one point suspension hook and lift straight upwards.

TYPICAL PUMP

- **DO NOT** lift machine to unnecessary heights.
- **ALWAYS** tie down equipment during transport by securing the equipment with rope.

ENVIRONMENTAL SAFETY

NOTICE

- Dispose of hazardous waste properly. Examples of potentially hazardous waste are used motor oil, fuel and fuel filters.

- **DO NOT** use food or plastic containers to dispose of hazardous waste.
- **DO NOT** pour waste, oil or fuel directly onto the ground, down a drain or into any water source.

Table 1. Specifications (Pump)		
Pump	**Model**	**QP2TH**
	Type	Trash Pump
	Suction	2.0 in. (51 mm.)
	Discharge Size	2.0 in. (51 mm.)
	Maximum Pumping Capacity	211 gallons/minute (800 liters/minute)
	Max. Solids Diameter	1.00 in. (25.4 mm)
	Max. Suction Lift	25 ft. (7.6 m)
	Max. Head	98 ft. (30.0 m)
	Max. Pressure	42 psi (292 kPa)
Dry Net Weight		97 lbs. (44 Kg.)

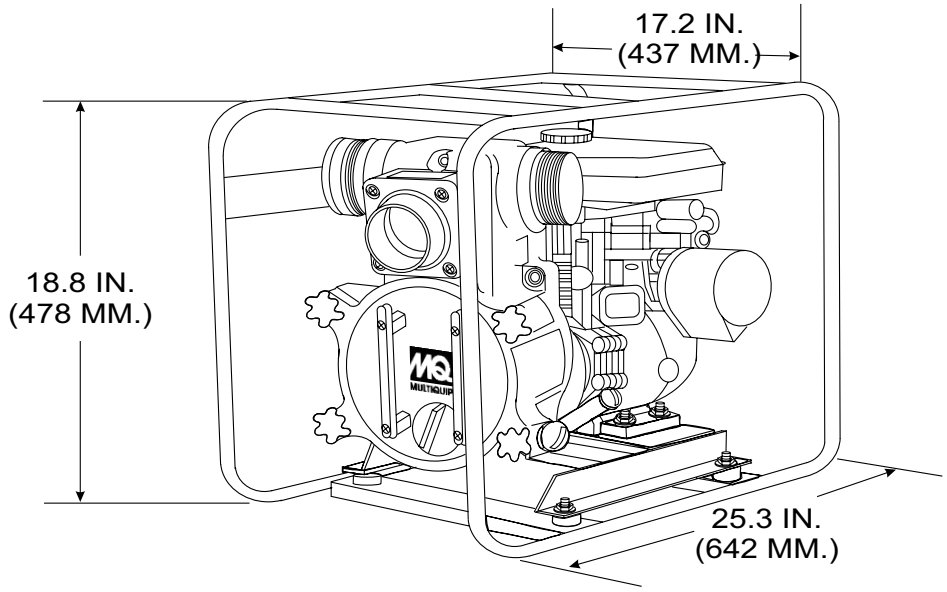

Figure 1. QP2TH Dimensions

Table 2. Specifications (Engines)		
Engine	**Model**	**HONDA GX160K1QX2/ GX160U1QX2/GX160UT2QX2**
	Type	Air-cooled 4 stroke, Single Cylinder, OHV, Horizontal Shaft Gasoline Engine
	Bore x Stroke	2.7 in. x 1.8 in. (68 mm x 45 mm)
	Displacement	163 cc (9.9 cu-in)
	Max Output	4.8 H.P./3,600 R.P.M.
	Fuel Tank Capacity	Approx.0.82 U.S. Gallons (3.1liters)
	Fuel	Unleaded Automobile Gasoline
	Lube Oil Capacity	0.61 quarts (0.58 liters)
	Speed Control Method	Centrifugal Fly-weight Type
	Starting Method	Recoil Start
Dimension (L x W x H)		12.0 x 14.4 x 13.2 in. (304 x 362 x 335 mm)
Dry Net Weight		33.1 lbs (15 Kg.)

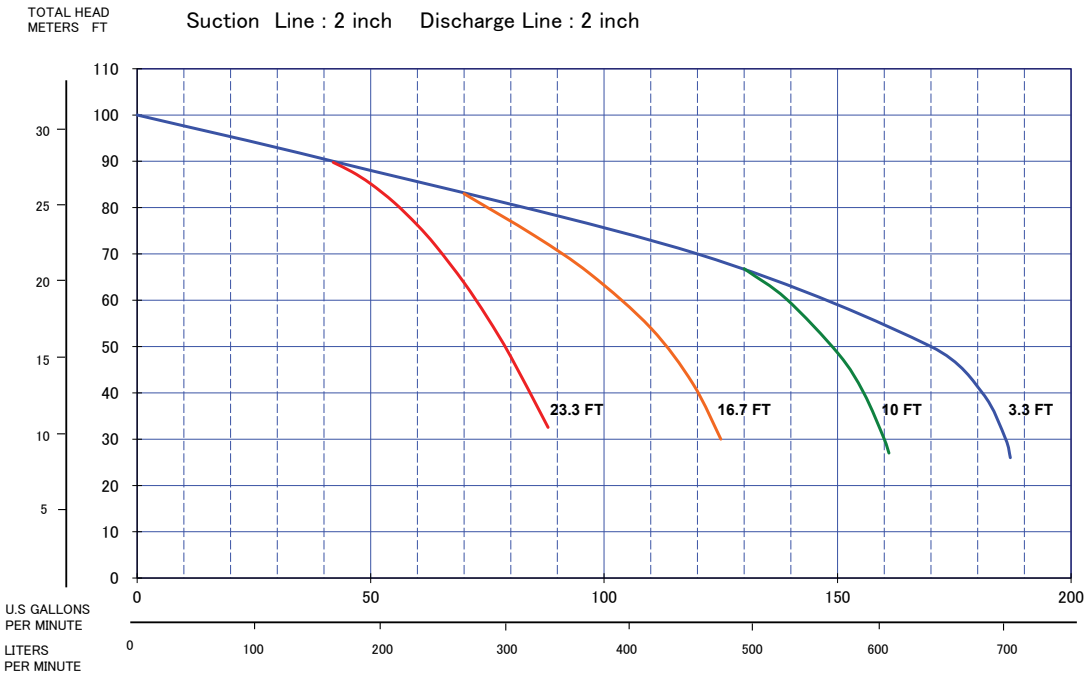

Figure 2. QP2TH Performance Curve

APPLICATION

The Multiquip QP2TH Trash Pump is designed to be used for dewatering applications. Both the suction and discharge ports on the QP2TH trash pump use a 2-inch diameter opening,which allows the pump to pump at a rate of approximately 211 gallons/minute (gpm) or 800 liters/minute (lpm).

This Wet Primed pump requires that the pump casing is first filled with water to assist with initial self-priming operations. Once a partial vacuum is created within the unit, the reduced atmospheric pressure allows water to flow through the suction line and the centrifugal force of the impeller/volute assembly permits water to be expelled from the discharge ports.

TRASH PUMP

Trash pumps derive their name from their ability to handle a greater amount of debris and solids than standard centrifugal pumps. These pumps generally handle solids up to 1/2 the size of the discharge opening making them less likely to clog. Also trash pumps are capable of handling water with 25% solids by weight.

The advantage of using a trash pump is that it can be quickly and easily disassembled in the field "without tools" and easily cleaned when clogged.

POWER PLANT

This trash pump is powered by a 4.8 horsepower air cooled 4-stroke, single cylinder HONDA GX160 gasoline engine that incorporates a low “Oil Alert Feature.”

OIL ALERT FEATURE

In the event of low oil or no oil, the HONDA GX160 engine has a built-in oil alarm engine shut-down feature. In the event the oil level is low the engine will automatically shutdown.

SUCTION LIFT

This pump is intended to be used for dewatering applications and is capable of suction lifts up to 25 feet at sea level. For optimal suction lift performance keep the suction hose or line as short as possible. In general always place the pump as close to the water as possible.

PUMP SUPPORT

The pump should always be placed on solid stationary ground in a level position.

NEVER place the pump on ***soft soil.*** The suction hose or pipe connection should always be checked for tightness and leaks. A small suction leak in the hose or fittings could prevent the pump from priming.

ELEVATION

Higher elevations will effect the performance of the pump. Due to less atmospheric pressure at higher altitudes, pumps **DO NOT** have the priming ability that they have at sea level. This is due to the “thinner air” or lack of oxygen at higher altitudes.

A general rule of thumb is that for every 1,000 feet of elevation above sea level a pump will lose one foot of priming ability.

For example, in Flagstaff, Arizona where the elevation is approximately 7,000 feet, the pump would have a suction lift of only 18 feet rather than the 25 feet at sea level. Table 3 shows suction lift at various elevations.

Table 3. Suction Lift at Various Elevations

Altitude Feet (Meters)	Suction Lift in Feet (Meters)			
Sea Level	10.0 (3.048)	15.0 (4.572)	20.0 (6.096)	25.0 (7.620)
2,000 (610)	8.80 (2.680)	13.2 (4.023)	17.6 (5.364)	22.0 (6.705)
4,000 (1,219)	7.80 (2.377)	11.7 (3.566)	15.6 (4.754)	19.5 (5.943)
6,000 (1,829)	6.90 (2.103)	10.4 (3.169)	13.8 (4.206)	17.3 (5.273)
8,000 (2,438)	6.20 (1.889)	9.30 (2.834)	12.4 (3.779)	15.5 (4.724)
10,000 (3,048)	5.70 (1.737)	8.60 (2.621)	11.4 (3.474)	14.3 (4.358)

Table 4 shows percentage drops in performance as elevation increases.

Table 4. Performance Loss at Various Elevations

Altitude Feet (Meters)	Discharge Flow	Discharge Head
Sea Level	100%	100%
2,000 (610)	97%	95%
4,000 (1,219)	95%	91%
6,000 (1,829)	93%	87%
8,000 (2,438)	91%	83%
10,000 (3,048)	88%	78%

Figure 3 shows key component areas of the QP2TH.

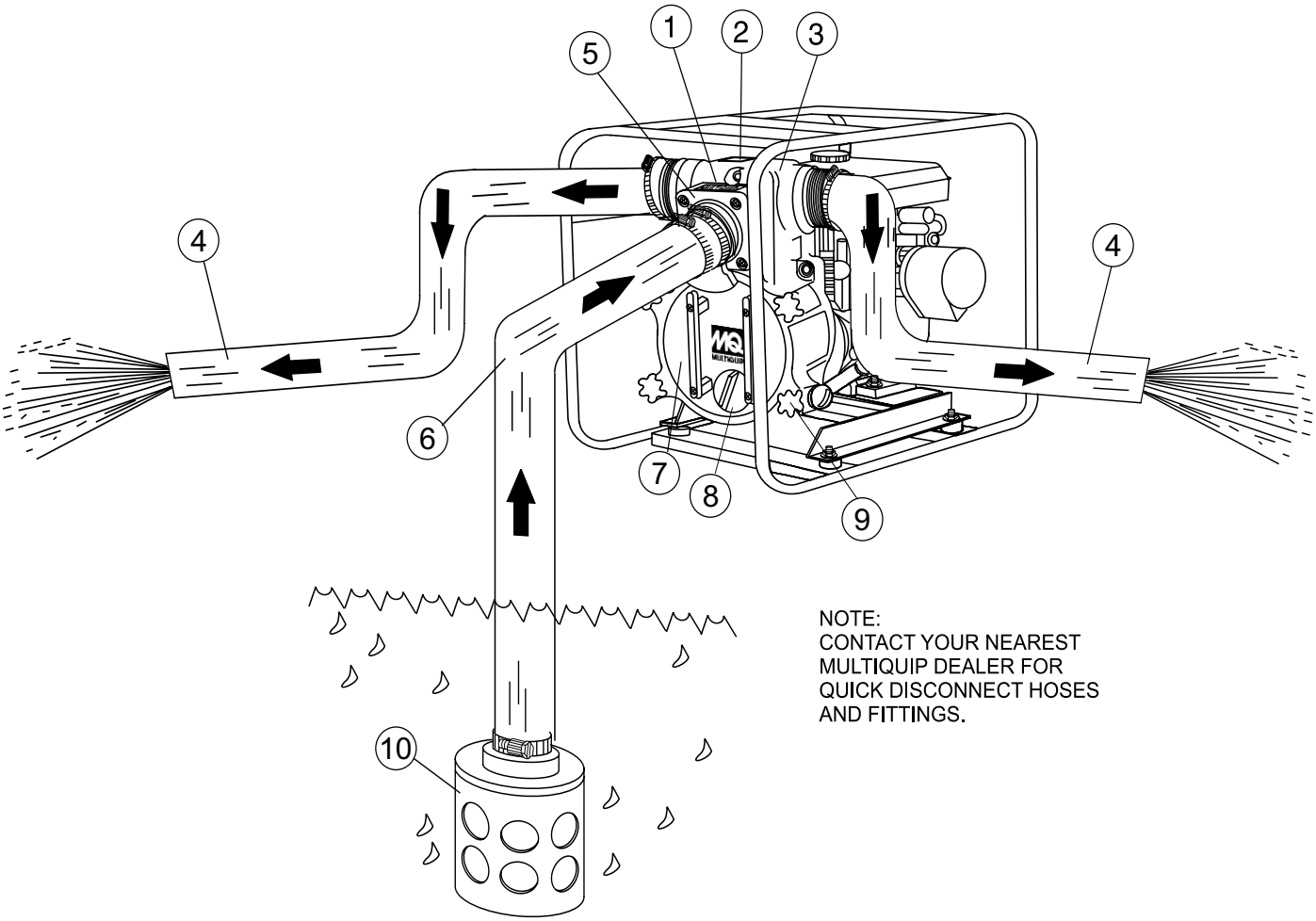

Figure 3. QP2TH Pump Application

1. **Pump** — The model QP2TH is a 2-inch trash pump used in general dewatering applications. Typical dewatering applications consist of: manholes, septic tanks, ponds, ditch water, silt water, muddy water, and water with debris.

2. **Fill Cap** — Prior to operations, the pump casing MUST BE filled with water. Remove this cap to add water to the pump. After the initial prime, a sufficient amount of water will be retained in the casing so that the operator will not need to re-prime later.

3. **Discharge Ports** — The pump is equipped with left and right side discharge ports. These ports are 2-inch male NPT thread and can accommodate discharge hose or pipe. Quick disconnect (Cam & Groove lock) hoses can be fitted onto the discharge ports with an optional coupler (A200A).

4. **Discharge Hose** — This pump is fitted with 2-inch male NPT thread discharge ports and can accommodate either threaded discharge hose or pipe. Quick disconnect (Cam & Groove lock) hoses can be fitted onto the discharge ports with an optional coupler (A200A). Make sure hoses lays flat and are not kinked. Contact MQ Sales Department for ordering information.

5. **Suction Port** — This pump is fitted with a 2" male NPT thread suction port and can accommodate either a threaded or quick disconnect (Cam & Groove lock) hose. For quick disconnect connections, an optional coupler (A200A) is necessary. Contact MQ Parts Department for ordering assistance.

6. **Suction Hose** — Use only recommended suction hoses. This pump is fitted with a 2" male NPT thread suction port and can accommodate threaded or quick disconnect (Cam & Groove lock) suction hose. Cam & Groove lock hose can be fitted onto the suction port with an optional coupler (A200A). Make sure the suction hose is not kinked. Contact MQ Sales Department for ordering information.

7. **Clean-out Cover** — When the pump is subjected to applications where large quantity of debris is present, it may be necessary to clean out the casing cavity of large rocks and such that have not passed through the pump. To open and gain access to the pump's clean-out cavity, loosen the four locking knobs (item 9); grip the cover handles and twist counterclockwise. Once the cover is clear of the four knob fasteners, pull the cover out towards you.

8. **Drain Plug** — After usage, and for storage, remove this plug and drain all water from the pump casing.

9. **Locking Knobs** — Turn both knobs counterclockwise to release cover. Turn clockwise to secure clean-out cover.

10. **Strainer** — Always attach a strainer to bottom side of the suction hose to prevent large objects and debris from entering the pump. Strainer should be positioned so that it will remain completely under water. Running the pump with the strainer above water for long periods can damage pump.

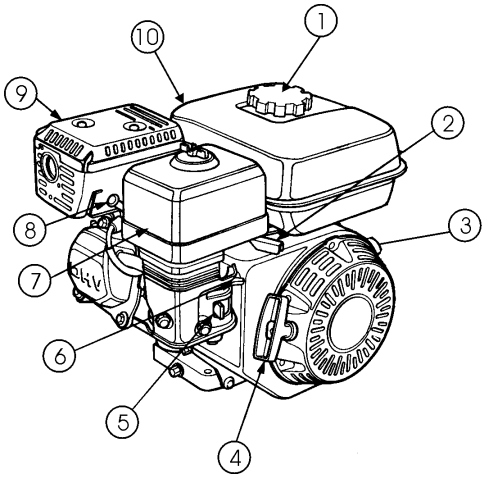

Figure 4. Engine Controls and Components

INITIAL SERVICING

The engine (See Figure 4) must be checked for proper lubrication and filled with fuel prior to operation. Refer to the manufacturers engine manual for instructions and details of operation and servicing. The engine shown above is a HONDA engine, operation for other types of engines may vary somewhat.

1. **Fuel Filler Cap —** Remove this cap to add unleaded gasoline to the fuel tank. Make sure cap is tightened securely. **DO NOT** over fill.

DANGER

Adding fuel to the tank should be done only when the engine is stopped and has had an opportunity to cool down. In the event of a fuel spill, **DO NOT** attempt to start the engine until the fuel residue has been completely wiped up, and the area surrounding the engine is dry.

2. **Throttle Lever —** Used to adjust engine RPM speed (lever advanced forward ***SLOW***, lever back toward operator ***FAST***).
3. **Engine ON/OFF Switch —** ON position permits engine starting, OFF position stops engine operations.
4. **Recoil Starter (pull rope) —** Manual-starting method. Pull the starter grip until resistance is felt, then pull briskly and smoothly.
5. **Fuel Valve Lever — OPEN** to let fuel flow, **CLOSE** to stop the flow of fuel.
6. **Choke Lever —** Used in the starting of a cold engine, or in cold weather conditions. The choke enriches the fuel mixture.
7. **Air Cleaner —** Prevents dirt and other debris from entering the fuel system. Remove wing-nut on top of air filter cannister to gain access to filter element.

NOTICE

Operating the engine without an air filter, with a damaged air filter, or a filter in need of replacement will allow dirt to enter the engine, causing rapid engine wear.

WARNING

Engine components can generate extreme heat. To prevent burns, **DO NOT** touch these areas while the engine is running or immediately after operating. **NEVER** operate the engine with the muffler removed.

8. **Spark Plug —** Provides spark to the ignition system. Set spark plug gap to 0.6 - 0.7 mm (0.028 - 0.031 inch). Clean spark plug once a week.
9. **Muffler —** Used to reduce noise and emissions.
10. **Fuel Tank —** Holds unleaded gasoline. For additional information refer to engine owner's manual.

CAUTION

DO NOT attempt to operate the pump until the Safety Information, General Information and Inspection sections of this manual have been read and thoroughly understood.

BEFORE STARTING

1. Read safety instructions at the beginning of manual.
2. Clean the pump, removing dirt and dust, particularly the engine cooling air inlet, carburetor and air cleaner.
3. Check the air filter for dirt and dust. If air filter is dirty, replace air filter with a new one as required.
4. Check carburetor for external dirt and dust. Clean with dry compressed air.
5. Check fastening nuts and bolts for tightness.

Engine Oil Check

1. To check the engine oil level, place the pump on secure level ground with the engine stopped.
2. Remove the filler dipstick from the engine oil filler hole (See Figure 5) and wipe clean.

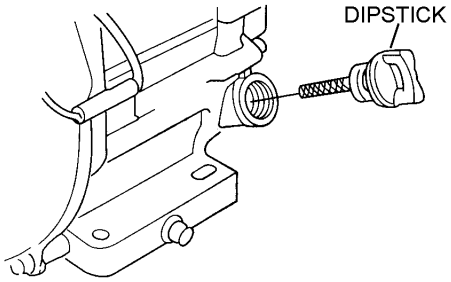

Figure 5. Engine Oil Dipstick (Removal)

3. Insert and remove the dipstick without screwing it into the filler neck. Check the oil level shown on the dipstick.
4. If the oil level is low (See Figure 6), fill to the edge of the oil filler hole with the recommended oil type (Table 5). Maximum oil capacity is 0.61 quarts (0.58 liters).

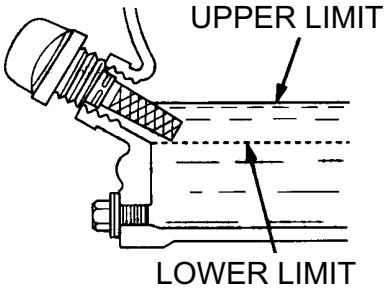

Figure 6. Engine Oil DipStick (Oil Level

Table 5. Oil Type		
Season	**Temperature**	**Oil Type**
Summer	25°C or Higher	SAE 10W-30
Spring/Fall	25°C~10°C	SAE 10W-30/20
Winter	0°C or Lower	SAE 10W-10

DANGER

Motor fuels are highly flammable and can be dangerous if mishandled. **DO NOT** smoke while refueling. **DO NOT** attempt to refuel the pump if the engine is ***hot! or running.***

Fuel Check

1. Remove the gasoline cap located on top of fuel tank.
2. Visually inspect to see if the fuel level is low. If fuel is low, replenish with unleaded fuel.
3. When refueling, be sure to use a strainer for filtration. **DO NOT** top-off fuel. Wipe up any spilled fuel ***immediately!***

1. It is advantageous to place the pump as close as possible to the water source (Figure 7) on a solid, level operating surface. The most critical factor for successful pump operations is not to exceed 25' Total Suction Lift (at sea level).
2. Ensure that the pump has the proper level of fuel and engine oil.
3. Initially prime the pump by removing the fill cap (see Figure 3) and filling the casing with water. If the pump casing is not filled with water prior to operations, it will not be able to start the pumping process and you risk overheating the mechanical seal assembly.
4. Attach the proper suction and discharge hoses to the pump ports. Ensure that the hose O-rings are in place, and that hose do not show any cracks, gouges, or holes. The hoses should not be kinked, and must be secured tightly to their respective ports.
5. A proper suction hose is commonly reinforced with rigid PVC helix and is specifically designed to safeguard against collapsing during pumping operations. It is essential that the pump utilize a suction hose with the same diameter as the suction port.
6. Ensure that the strainer is placed on the end of the suction hose, and that the hose is placed in the water source in such a manner as not to bury the strainer into sand or silt.

⚠ CAUTION

The strainer should be positioned so it will remain completely ***under water***. Running the pump with the strainer above water for long periods can damage the pump.

7. The discharge side may utilize proper discharge hoses, PVC pipe, or concrete pipe.
8. Check that discharge hoses lay flat and as straight as possible. Remove any sharp bends or kinks from the hose so the water flow cannot be blocked.
9. Once the engine is started; and depending on the application set-up, the priming process will take a few moments before water begins to flow.
10. The performance of the pump (Flow, Head, Water Velocity, and Pressure) is dependent on the many factors that surround the application. These factors include, but are not limited to: operating altitude, suction lift, discharge and suction hose diameter and length, overall friction loss coefficients, the specify gravity of the fluid to be pumped, the fluid temperature, and total discharge head.

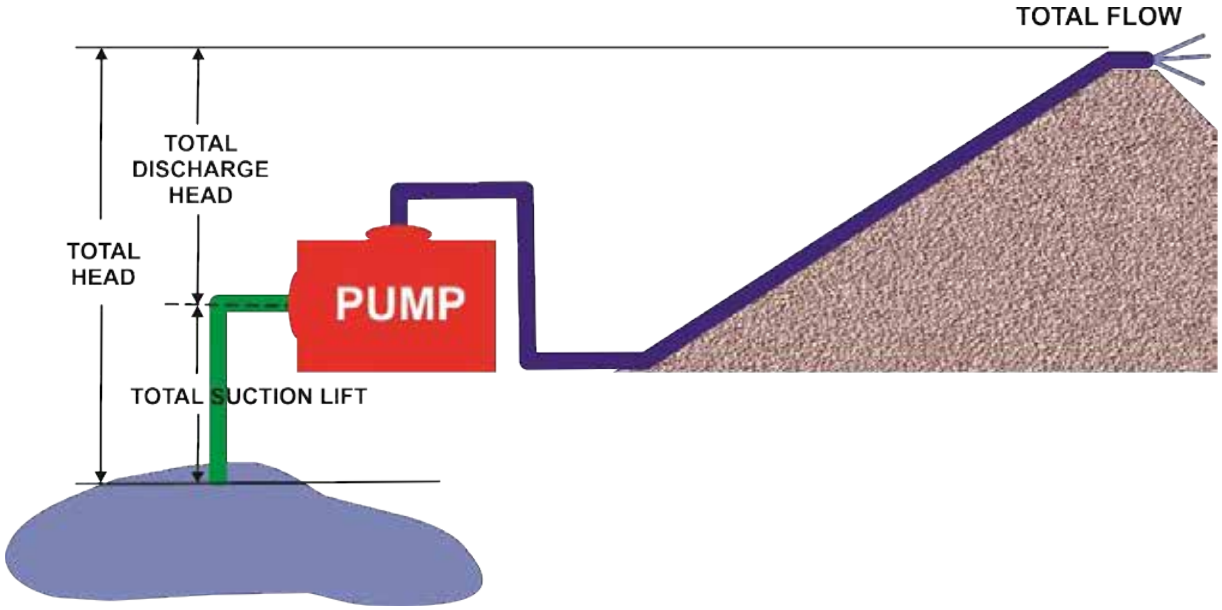

Figure 7. Pump Placement

⚠ CAUTION

DO NOT attempt to start the engine unless the pump has previously been primed with water. Severe pump damage will occur if pump has not been primed.

STARTING THE ENGINE

1. Place the engine fuel valve lever (See Figure 8) to the **ON** position.

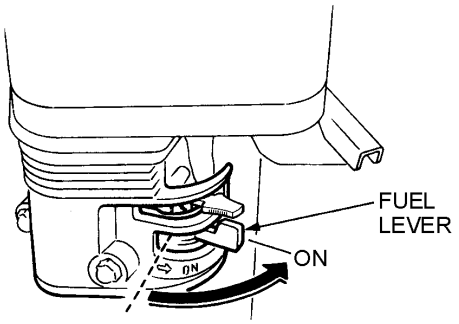

Figure 8. Engine Fuel Valve Lever (ON Position)

2. Move the throttle lever (See Figure 9) away from the slow position, about 1/3 of the way toward the fast position.

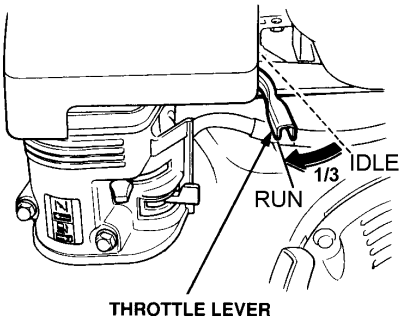

Figure 9. Throttle Lever (1/3 Start Position

3. Place the choke lever (See Figure 10) in the **CLOSED** position if starting a cold engine.

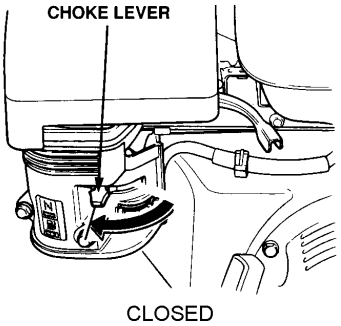

Figure 10. Engine Choke Lever (Closed)

4. Place the choke lever (See Figure 11) in the **OPEN** position if starting a warm engine or the temperature is warm.

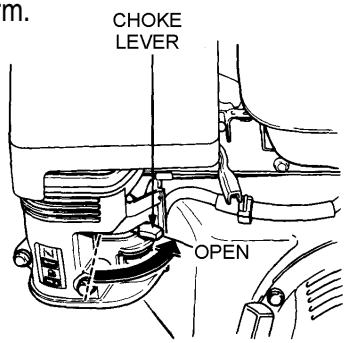

Figure 11. Engine Choke Lever (Open)

5. Place the engine **ON/OFF** switch (See Figure 12) in the **ON** position.

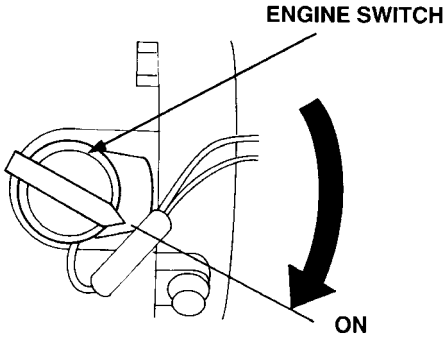

Figure 12. Engine ON/OFF Switch (ON Position)

6. Grasp the starter grip (See Figure 13) and slowly pull it out. The resistance becomes the hardest at a certain position, corresponding to the compression point. Pull the starter grip briskly and smoothly for starting.

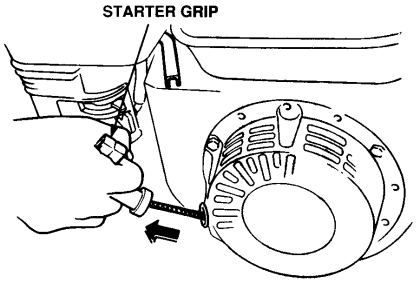

Figure 13. Starter Grip

7. If the engine has started and the choke lever was moved to the **CLOSED** position to start the engine, gradually move the choke lever to the **OPEN** position (Figure 14) as the engine warms up. If the engine has not started repeat steps 1 through 6.

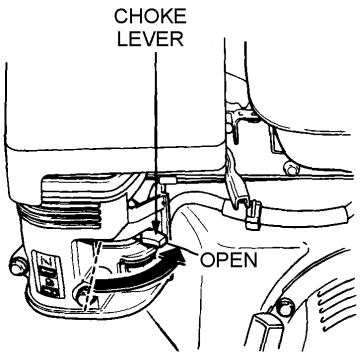

Figure 14. Choke Lever (Open)

8. Before the pump is placed in to operation, run the engine for several minutes. Check for fuel leaks, and noises that would associate with a lose component.

9. To begin pumping, place the throttle lever (See Figure 15) in the **RUN** position. If water is not flowing out of the discharge port, turn off the engine and check for and clear any obstructions within the suction hose.

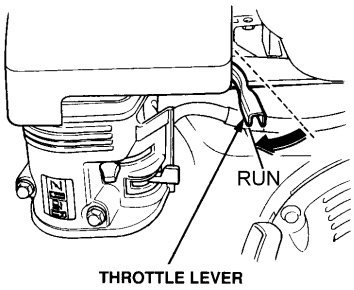

Figure 15. Throttle Lever (Run)

⚠ WARNING

Water must always be flowing through the pump casing while the engine is running. Loss of flow may be the result of a loss of prime, restricted water flow or a dead-head situation. Please note that in such a condition, water in the pump can reach temperatures of 150-200°F in 15 to 20 minutes. This can cause serious burns if this hot water comes into contact with unprotected skin.

Before touching or opening the fill plug or drain plug, first turn off the engine and allow the pump casing to cool to the touch, and then open the pump carefully. Be cautious of any built up water pressure.

⚠ CAUTION

ALWAYS run engine at ***full speed*** while pumping.

STOPPING THE ENGINE

Normal Shutdown

1. Move the throttle lever to the **IDLE** position (See Figure 16) and run the engine for three minutes at low speed.

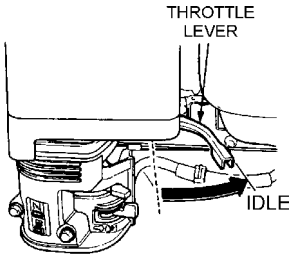

Figure 16. Throttle Lever (Idle)

2. After the engine cools, turn the engine **ON/OFF** switch to the **OFF** position (See Figure 17).

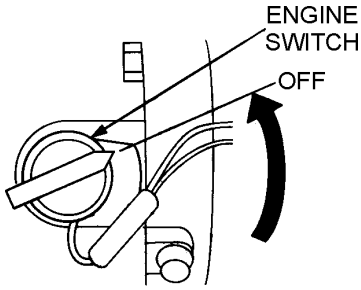

Figure 17. Engine ON/OFF Switch (OFF)

3. Place the fuel shut-off lever (See Figure 18) in the **OFF** position

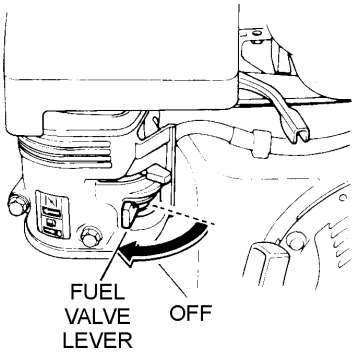

Figure 18. Fuel Valve Lever (OFF)

Emergency Shutdown

1. Move the throttle lever quickly to the **IDLE** position, and place the engine **ON/OFF** switch in the **OFF** position.

PUMP VACUUM TEST

CAUTION

DO NOT attempt to start the engine unless the pump has previously been ***primed*** with water. Severe pump damage will occur if pump has not been primed.

To perform the pump vacuum test do the following:

1. Remove the pump fill cap (See Figure 3), and fill the pump with water.
2. Start the engine as outlined in the initial start-up section, and wait for the pump to begin pumping.
3. As shown in Figure 19, place a water hose inside the discharge opening of the pump, and turn on the water. This flow of water into the discharge opening will ***prevent*** the pump from running dry.
4. Place the Pump Vacuum Tester (P/N 7000030) over the pump suction (inlet) opening (See Figure 19) with the vacuum gauge facing upwards. It may be necessary to apply a small amount of water around the rubber seal of the vacuum tester to make a good suction fit.
5. Check and make sure that there are no air leaks between the vacuum tester and the inlet port on the pump. If air leaks are present reseat vacuum tester.
6. Run the pump for a few minutes while monitoring the vacuum gauge. If the gauge indicates a reading between -25 and -20 in. Hg. (inches of mercury) then it can be assumed that the pump is working correctly.

NOTICE

25 in. Hg (inches of mercury) translates into 25 feet of lift at ***sea level.***

7. If the vacuum tester gauge indicates a reading below -20 in. Hg, it can then be assumed that the pump is not functioning correctly, and corrective action needs to be taken.
8. To test the flapper valve, shutdown the engine. The vacuum tester should remain attached to the pump suction inlet port by vacuum. This indicates the pump's flapper valve is seating properly to hold water in the suction hose when the engine is stopped. This prevents backflow and allows for faster priming when the engine is restarted.

ADJUSTING IMPELLER CLEARANCE

1. If it is necessary to replace impeller or volute, be sure clearance between impeller and volute is adjusted
2. The impeller should be as close to the volute as possible without rubbing against it. Clearance is adjusted by adding or removing shims from behind the impeller.
3. Check clearance between impeller and insert by slowly pulling starter rope to turn impeller.

NOTICE

It is important not to remove too many shims or the clearance between the impeller and volute will become ***too wide*** and pump performance will be reduced. Remember as the impeller wear down, additional shims may be required to maintain the clearance between the impeller and insert.

4. Check the impeller every six months for wear, and for clearance between the impeller face and the volute. Also check the shaft seal for wear, as well as the shaft sleeve.

PUMP CLEANING

After pumping water containing large amounts of dirt and debris, perform the following:

1. Remove the drain plug from the pump housing (Figure 3) and drain any water left in the pump.
2. See Components section, Clean-out Cover, for pump cleaning procedure.
3. Clean and remove dirt, debris from pump casing. Inspect impeller and volute for wear. Replace any damaged or worn parts.

CAUTION

The impeller may develop sharp edges. Use extreme care when cleaning around the impeller to prevent being cut.

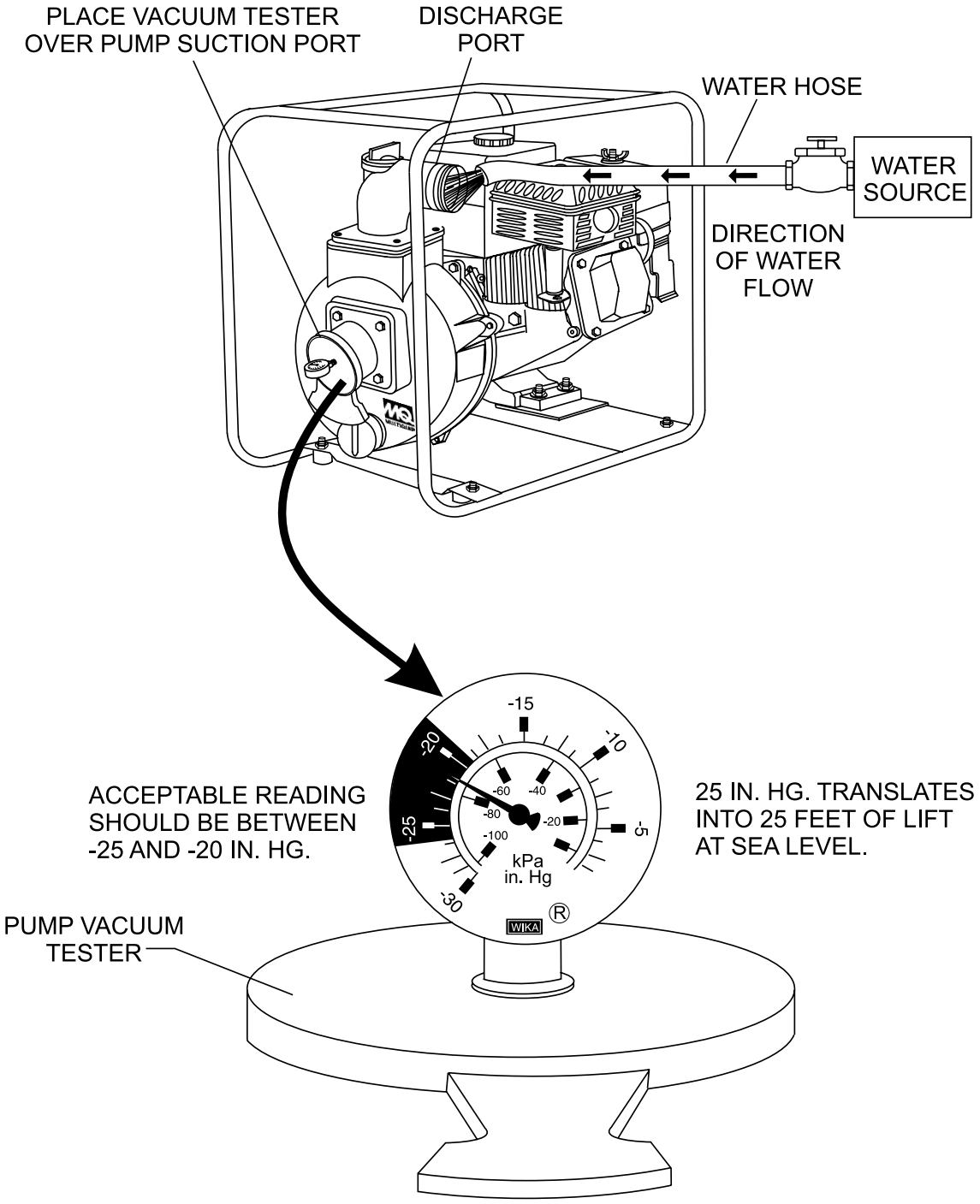

Figure 19. Pump Vacuum Tester

ENGINE MAINTENANCE

Perform engine maintenance procedures as referenced by Table 6 below:

Table 6. Engine Maintenance Schedule

Description (3)	Operation	Before	First Month or 10 hrs	Every 3 Months or 25 hrs	Every 6 Months or 50 hrs	Every Year or 100 hrs	Every 2 Years or 200 hrs
Engine Oil	CHECK	X					
	CHANGE		X				
Air Cleaner	CHECK	X					
	CHANGE			X (1)			
All Nuts and Bolts	Re-tighten If Necessary	X					
Spark Plug	CHECK-CLEAN				X		
	REPLACE						X
Cooling Fins	CHECK				X		
Spark Arrester	CLEAN					X	
Fuel Tank	CLEAN					X	
Fuel Filter	CHECK					X	
Idle Speed	CHECK-ADJUST					X (2)	
Valve Clearance	CHECK-ADJUST						X (2)
Fuel lines	CHECK	Every 2 years (replace if necessary) (2)					

1. Service more frequently when used in **DUSTY** areas.
2. These items should be serviced by your service dealer, unless you have the proper tools and are mechanically proficient. Refer to the HONDA shop Manual for service procedures.
3. For commercial use, log hours of operation to determine proper maintenance intervals.

NOTICE

Refer to manufacturer engine manual for specific servicing instructions.

DAILY

1. Thoroughly remove dirt and oil from the engine and control area. Clean or replace the air cleaner elements as necessary. Check and retighten all fasteners as necessary. Check the spring box and bellows for oil leaks. Repair or replace as needed.

WEEKLY

1. Remove the fuel filter cap and clean the inside of the fuel tank.
2. Remove or clean the filter at the bottom of the tank.
3. Remove and clean the spark plug (See Figure 20), then adjust the spark gap to 0.028~0.031 inch (0.6~0.7 mm). This unit has electronic ignition, which requires no adjustments.

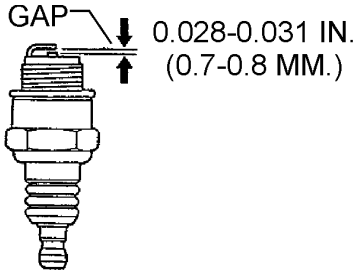

Figure 20. Spark Plug Gap

ENGINE OIL

1. Drain the engine oil when the oil is ***warm*** as shown in Figure 21.
2. Remove the oil drain bolt and sealing washer and allow the oil to drain into a suitable container.
3. Replace engine oil with recommended type oil as listed in Table 5. Engine oil capacity is 1.16 quarts (1.1 liters). **DO NOT** over fill.
4. Install drain bolt with sealing washer and tighten securely.

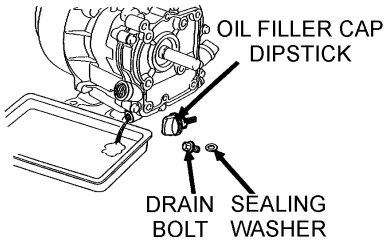

Figure 21. Engine Oil (Draining)

DANGER

DO NOT use gasoline as a cleaning solvent, because that would create a risk of fire or explosion.

ENGINE AIR CLEANER

1. Remove the air cleaner cover and foam filter element as shown in Figure 22.
2. Tap the paper filter element (See Figure 22) several times on a hard surface to remove dirt, or blow compressed air [not exceeding 30 psi (207 kPa, 2.1 kgf/cm^2)] through the filter element from the air cleaner case side. ***NEVER*** brush off dirt. Brushing will force dirt into the fibers. Replace the paper filter element if it is excessively dirty.
3. Clean foam element in warm, soapy water or non-flammable solvent. Rinse and dry thoroughly. Dip the element in clean engine oil and completely squeeze out the excess oil from the element before installing.

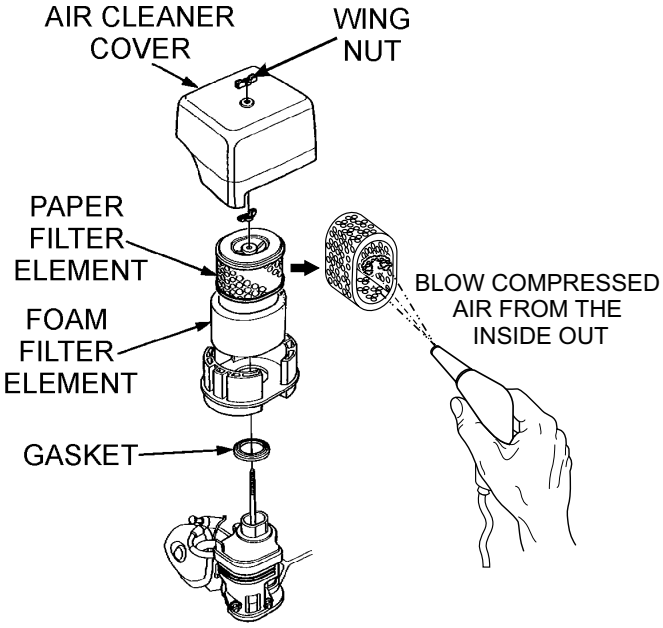

Figure 22. Engine Air Cleaner

SPARK ARRESTER CLEANING

Clean the spark arrester every 6 months or 100 hours.

1. Remove the 4 mm screw (3) from the exhaust deflector, then remove the deflector. See Figure 23.
2. Remove the 5 mm screw (4) from the muffler protector, then remove the muffler protector.
3. Remove the 4 mm screw from the spark arrester, then remove the spark arrester.

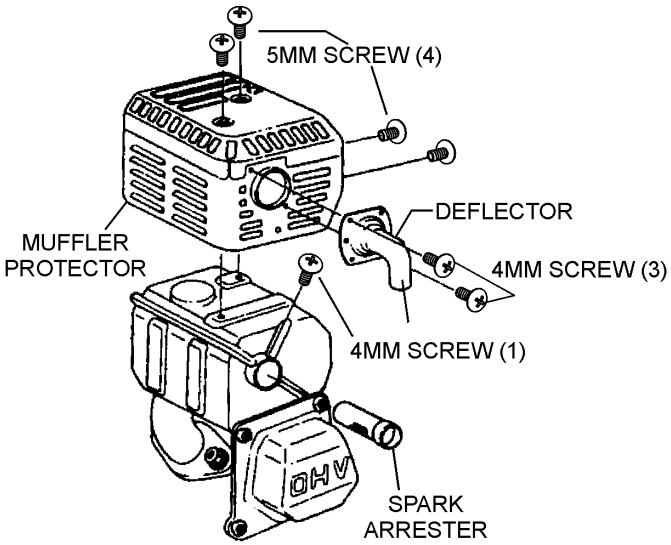

Figure 23. Spark Arrester Removal

4. Carefully remove carbon deposits from the spark arrester screen (Figure 24) with a wire brush.

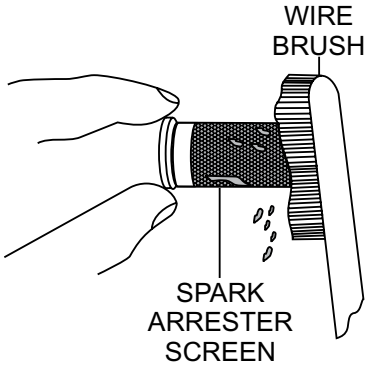

Figure 24. Cleaning The Spark Arrester

5. If the spark arrester is damaged and has breaks or holes, replace with a new one.
6. Reinstall the spark arrester and muffler protector in reverse order of disassembly.

PUMP STORAGE

For storage of the pump for over 30 days, the following is required:

- Drain the fuel tank completely.
- Run the engine until the fuel is completely consumed.
- Completely drain used oil from the engine crankcase and fill with fresh clean oil, then follow the procedures described in the engine manual for engine storage.
- Remove the drain plug from the pump and drain out any water from left in the housing.
- Remove the pump cover and clean inside of pump housing. Coat inside of pump housing with a light film of oil to reduce corrosion. A spray can of oil works well for this application.
- Cover suction and discharge ports with duct tape to prevent any foreign matter from falling into pump.
- Cover pump and engine with plastic covering or equivalent and store in a clean, dry place.
- To protect the water-cooled seals, place one-half pint of lubricating oil (new or used) through the discharge opening on the pump and crank the engine several times. This will prevent excessive corrosion and also keep the mechanical seal lubricated.

Table 7. Engine Troubleshooting		
Symptom	**Possible Problem**	**Solution**
Difficult to start		
Fuel is available but spark plug will not ignite. (Power available at high tension cable).	Ignition plug being bridge?	Check ignition system.
	Carbon deposit at ignition?	Clean or replace ignition.
	Short circuit due to defective insulators?	Replace insulators.
	Improper spark gap?	Set spark plug gap to the correct gap.
Fuel is available but spark plug will not ignite. (Power **NOT** available at high tension cable).	Short circuit at stop switch?	Check stop switch circuit. Replace stop switch if defective.
	Ignition coil defective?	Replace ignition coil.
Fuel is available and spark plug ignites (compression **normal**).	Muffler clogged with carbon deposits?	Clean or replace muffler.
	Mixed fuel quality is inadequate?	Check fuel to oil mixture.
	Fuel in use inadequate (water, dust)?	Flush fuel system and replace with fresh fuel.
	Air Cleaner clogged?	Clean or replace air cleaner.
Fuel is available and spark plug ignites (compression **low**).	Defective cylinder head gasket?	Tighten cylinder head bolts or replace head gasket.
	Cylinder worn?	Replace cylinder.
	Spark plug loose?	Tighten spark plug.
Operation not satisfactory		
Not enough power available (compression normal, no miss-firing).	Air cleaner clogged?	Clean or replace air cleaner.
	Air in fuel line?	Bleed (remove air) from fuel line.
	Fuel level in carburetor float chamber improper?	Adjust carburetor float.
	Carbon deposits in cylinder?	Clean or replace cylinder.
Not enough power available (compression normal, miss-firing).	Ignition coil defective?	Flush fuel system and replace with fresh fuel.
	Ignition plug often shorts?	Replace ignition wires, clean ignition.
	Fuel in use inadequate (water, dust)?	Flush fuel system and replace with fresh fuel.
Engine overheats.	Excessive carbon deposition in combustion chamber?	Clean or replace crankcase.
	Exhaust or muffler clogged with carbon.	Clean or replace muffler.
	Spark plug heat value incorrect?	Replace spark plug with correct type spark plug.

Table 7. Engine Troubleshooting		
Symptom	**Possible Problem**	**Solution**
Operation not satisfactory		
Rotational speed fluctuates.	Governor adjustment improper?	Adjust governor to correct lever.
	Governor spring defective?	Clean or replace ignition.
	Fuel flow erratic?	Check fuel line.
	Air taken in through suction line?	Check suction line.
Recoil starter not working properly.	Dust in rotating part?	Clean recoil starter assembly.
	Spring failure?	Replace spiral spring.

Table 8. Pump Troubleshooting		
Symptom	**Possible Problem**	**Solution**
Pump does not take on water.	Not enough priming water in the housing?	Add water.
	Engine speed too low?	Increase throttle.
	Strainer plugged?	Clean strainer.
	Suction hose damaged?	Replace or repair hose, and clamps.
	Air leak at suction port?	Check that fittings are tight and properly sealed.
	Pump is located too high above water line?	Move pump closer to water.
	Debris collecting in pump housing?	Clean pump housing.
	Too much distance between impeller and volute.	Adjust clearance by adding shims or replace impeller. Min. .006" - Max. .020".
	Water leaking out weep hole between pump and engine?	Check condition of mechanical seal and gaskets, between pump end and engine housing.
Pump takes in water, little or no discharge.	Engine speed too low?	Increase throttle speed.
	Suction strainer partially plugged?	Clean strainer.
	Impeller/Volute worn?	Adjust clearance by adding shims or replace impeller/volute.
Suction hose leaks at inlet.	Fittings/clamps are not sealed properly?	Tighten, replace or add clamp. (Keep extra seals on pump).
	Hose diameter is too large?	Use smaller diameter hose or replace hose.
Discharge does not stay on coupling.	Pressure too high?	Check pressure, add additional clamp.
	Hose kinked or end blocked?	Check hose.
Impeller does not turn: pump is hard to start.	Impeller jammed or blocked?	Open pump cover and clean dirt and debris from inside housing.
	Impeller and volute binding?	Adjust clearance by removing shim from behind impeller.
	Defective engine?	See Engine Owner's Manual.

NOTES

OPERATION MANUAL

HERE'S HOW TO GET HELP

PLEASE HAVE THE MODEL AND SERIAL NUMBER ON-HAND WHEN CALLING

UNITED STATES

Multiquip Inc.

(310) 537- 3700
6141 Katella Avenue Suite 200
Cypress, CA 90630
E-MAIL: mq@multiquip.com
WEBSITE: www.multiquip.com

CANADA

Multiquip

(450) 625-2244
4110 Industriel Boul.
Laval, Quebec, Canada H7L 6V3
E-MAIL: infocanada@multiquip.com

UNITED KINGDOM

Multiquip (UK) Limited Head Office

0161 339 2223
Unit 2, Northpoint Industrial Estate,
Globe Lane,
Dukinfield, Cheshire SK16 4UJ
E-MAIL: sales@multiquip.co.uk

© COPYRIGHT 2020, MULTIQUIP INC.

Multiquip Inc, the MQ logo are registered trademarks of Multiquip Inc. and may not be used, reproduced, or altered without written permission. All other trademarks are the property of their respective owners and used with permission.

This manual MUST accompany the equipment at all times. This manual is considered a permanent part of the equipment and should remain with the unit if resold.

The information and specifications included in this publication were in effect at the time of approval for printing. Illustrations, descriptions, references and technical data contained in this manual are for guidance only and may not be considered as binding. Multiquip Inc. reserves the right to discontinue or change specifications, design or the information published in this publication at any time without notice and without incurring any obligations.

Your Local Dealer is:

MULTIQUIP®